Installation and Operational Manual

Effective 4/2/25

Reliance® Tubs

Installer: This booklet must be given to the product owner. Please include important information below:

Distributor Name
Model Number
Manufacturer's Date
Serial / Registration Number

Owner's Manual
&
Installation Guide

Thank you for purchasing an MTI Baths product.

The instructions in this booklet will provide you with the information needed to install and maintain this unit. The ease of cleaning and the elegant look will provide you with many years of pleasure. This information is also available on **mtibaths.com**.

Our customer service department is available to answer any additional questions you may have pertaining to installation and care of your MTI product. Please call **800-783-8827** to speak to our Service Department or email **service@mtibaths.com**.

Warranty Cards & CSA Labels

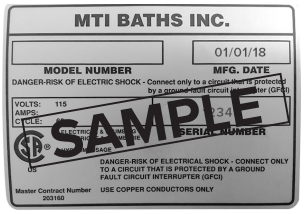

IMPORTANT: Locate and note your serial number on the cover of this manual for any future service needs.

Register your product here with MTI Baths.

Table of Contents

Important Safety Instructions 4

Bath Installation Instructions 5–11
- Product Inspect & Test Procedures 5
- Electrical Specifications 6
- Important Information — Freestanding Tubs 7
- Rough-In Charts 7
- Drain Installation 8
- Valves and Virtual Spout 9
- Drop-In / Undermount / Alcove Installation ..... 10—11

Operation Instructions 12
- Air Bath and Whirlpool 12
- System Cleaning Instructions 12

Care and Cleaning Instructions 13

Troubleshooting 14

Residential Warranty ..... 16—17

Commercial Warranty ..... 18—19

Important Safety Instructions

This manual contains information and instructions for proper handling, operation and maintenance of your MTI bathtub. Failure to follow these instructions could result in personal injury, electrical shock or fire.

WARNING: When using electrical products, basic precautions should be followed, including the following:

- Do not permit children to use this unit unless they are closely supervised by an adult at all times. Supervision is also required when bath is used by an elderly or handicapped individual.
- Never leave a full or filling bath unattended.
- Use this unit only for its intended use as described in this manual. Do not use attachments not recommended by the manufacturer. Never drop or insert any object into any opening.
- Do not operate this unit without guard over the suction fitting.
- The water in a bath should never exceed 40˚ C (104˚ F). Water temperatures between 38˚ C (100˚ F) and 40˚ C (104˚ F) are considered safe for a healthy adult. Usage time should be limited to approximately 10 minutes, followed by a shower to cool down. Longer exposures may result in hyperthermia, which can be fatal. The symptoms of this condition are nausea, dizziness and fainting. If symptoms are experienced, get out immediately and cool down. Seek medical attention if symptoms persist, and check with physician before using the system again. Lower water temperatures are recommended for extended use (exceeding 10 - 15 minutes) and for young children.
- Since excessive water temperatures have a high potential for causing fetal damage during the early months of pregnancy, pregnant or possibly pregnant women should limit water temperatures to 38˚ C (100˚ F).
- The use of drugs or alcoholic beverages before or during bathing may lead to unconsciousness with the possibility of drowning. Never use the bath while under the influence of alcohol, anticoagulants, stimulants, antihistamines, vasoconstrictors, vasodilators, hypnotics, narcotics or tranquilizers.
- Persons using medication or that have a medical history of heart disease, have had a recent surgical procedure, and/or have low or high blood pressure, circulatory system problems, or diabetes should consult a physician before using a bath or hydrotherapy tub. Medication may induce drowsiness while other medications may affect heart rate, blood pressure and circulation.

DANGER

- To reduce the risk of injury, enter and exit the bath slowly.
- Never operate electrically connected devices in or within 5' of the bath. Never drop or insert any object into any opening within the bath.
- Risk of electric shock. Connect only to circuits protected by a Ground Fault Circuit Interrupter (GFCI). Such a device should be installed by a licensed electrician and tested on a regular basis (at least monthly). To test the GFCI push the TEST button. The GFCI should interrupt the power. Push the RESET button and the power should be restored. If the GFCI fails to operate in this manner there is the possibility of an electric shock. DO NOT USE. Disconnect the unit and have the problem corrected by a qualified service technician. To avoid the possibility of personal injury and discoloration of the material surface, the inlet water temperature should not exceed 60˚ C (140˚ F).
- Disconnect power before servicing as more than one outlet may be energized.

A pressure wire connector is provided on the exterior of the pump or control with this unit to permit connection of a bonding conductor between this unit and all other exposed metal in the vicinity, as needed to comply with local requirements.

INSTALLER/OWNER BEARS ALL RESPONSIBILITY TO COMPLY WITH ALL STATE AND LOCAL CODES WHEN INSTALLING THIS PRODUCT.

IMPORTANT: When required by local codes, install a RPZ (Reduced Pressure Zone) backflow prevention device to each faucet supply line.

SAVE THESE INSTRUCTIONS

Installation Instructions – Inspect and Test Product

Read all instructions before installing tub. MTI recommends using a professional installer for this product. Installer/product owner is responsible for complying with all state and local codes.

This tub has been water tested at the factory and found to be fully operational and leak-free prior to shipping. Freight, handling and job site exposure may have deteriorated the tub's condition. It is the responsibility of the receiver to perform a thorough inspection of the product upon receipt and the installer to thoroughly test the unit for proper operation and leak detection prior to final installation and enclosure of the surrounding areas. Failure to do so will void warranty. **Warranty coverage will be void if unit is not tested and installed per the enclosed instructions.**

NOTICE: Certain cleaning products will permanently damage the material surface. Please see "Care & Cleaning Instructions" on pg. 13. Do not store tub in temperatures below 32° Fahrenheit. Proper waste and overflow installation is the responsibility of the installer.

MTI does not warrant leaks associated with improper drain or valve installation.

Inspect Product Thoroughly

- Damage from shipping or delivery must be reported to carrier immediately. Do not install damaged tub. MTI is not responsible for damage occurring during transit.
- Factory defect must be reported to factory before tub is installed. Defects or damage claimed after installation will be excluded from warranty.
- Ensure installation location is structurally sound, flat & level. Measure tub on site carefully. See individual specification sheets for tub weight and water capacity. Specifications are subject to change without notice. MTI is NOT responsible for any preparatory labor or materials.
- **Please note:** variations in resin/fiberglass thickness on the underside of the bath are not considered defects and do not affect the performance, integrity or quality of the bath.
- **NOTICE:** Always protect the tub from construction damage by using a protective cover. Damage, including chips and scratches incurred at the jobsite are excluded from warranty, but may be repaired by a qualified technician at the owner's expense. Do not stand in the tub or store materials in the tub during construction. Tubs are warrantied for indoor installation and use in a climate controlled environment only.

Test Procedures

1. Place the tub on a flat and level surface.
2. Seal the drain with tape.
3. Fill tub to overflow and allow tub to stand for five minutes without the motor(s) running. **NOTE:** DO NOT, under any circumstances, tape off or block the overflow in any way during water testing. Any controls located above the normal water line are designed to be water-resistant, not water-proof. The controls will not leak under normal usage, however, they are not warranted against leaks when improperly used or subjected to conditions for which they were not designed.
4. Plug in the motor(s) and any other components into a 110v GFCI outlet. Start the equipment and check for leaks by examining the area underneath and surrounding the tub.
5. Check that all optional equipment is functioning properly and that the features on the tub match exactly what was ordered. Operation instructions for each system may be found on pg. 12.
6. If any leaks or operating problems are discovered, do not complete installation until problems are resolved. MTI will not be responsible for leaks claimed after the tub is installed, nor any costs involved with removing or reinstalling the tub or the costs of any surrounding materials or labor. See troubleshooting section of this manual, call for assistance at 800-783-8827 or email service@mtibaths.com.

NEVER LEAVE A FULL OR FILLING BATH UNATTENDED

Electrical Specifications

Please see tub specification sheet and/or your order details for electrical components included. Each component will have electrical specifications listed on the product label.

Subject to change without notice. It is the responsibility of the installer to comply with all State and Local codes.

Airbath Blower	110 VAC	9.5 AMP
Whirlpool Pump 1 bhp	110 VAC	5.5 AMP
Inline Heater for Whirlpools (650-watt heater)	110 VAC	5.4 AMP
Inline Heater for Soakers and Airbaths (650-watt heater and ½ bhp pump)	110 VAC	10.9 AMP

When installing or using electrical products, basic precautions should always be followed, including:

- All MTI hydrotherapy systems require dedicated 110V circuits for the electrical components. See Electrical Specifications.
- Many options may be combined on a 20 amp circuit, as long as total amps of combined options do not exceed circuit capacity.
- When there are more than two power cords , they will be gathered together with a hang tag indicating the number of items requiring direct power for proper operation. This circuit must be protected by an accessible ground fault circuit interrupter (GFCI).
- Access must be provided to each electrical component. The access panels for most hydrotherapy tub systems must have a minimum size of 16" x 14" for future servicing. MTI will not authorize service unless clear access is available. Owner is responsible for providing proper access.
- Under no circumstance should any power cord(s) be altered. Products do not require hardwiring or separate, wall-mounted switch.
- The pressure wire connector located on the exterior of pumps and heaters permits connection of a No.8 AWG (8.4mm) solid copper bonding conductor to all other electrical equipment and exposed metal in the vicinity as needed to comply with local requirements.

NOTE: Air blowers do not require a bonding conductor.

Testing GFCI (test on a routine basis)

Push the TEST button. The GFCI should interrupt power.

Push the RESET button. Power should be restored.

WARNING: If the GFCI fails to operate in this manner, there is a ground current flowing, indicating the possibility of electric shock. DO NOT use this unit. Disconnect the unit and have the problem corrected by a qualified service representative before using.

Fig. 1

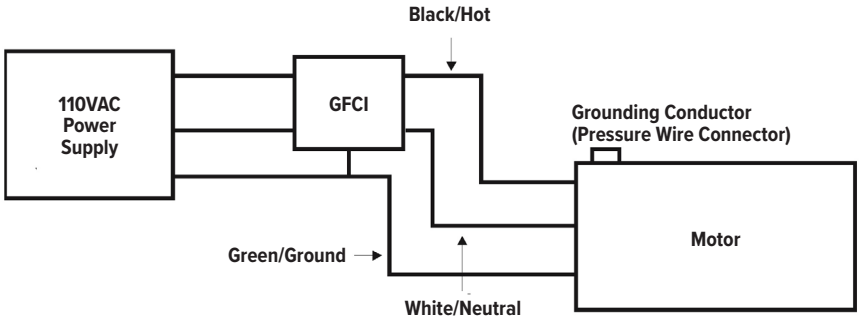

See Manufacturer's Wiring Diagram on Motor

- Unauthorized modification of this unit or any of its parts may cause unsafe operation and poor performance.
- DO NOT relocate the pump, or make other unauthorized modifications to the bath system, as this could adversely affect the performance and safe operation of the unit.
- MTI shall not be liable under its warranty or otherwise for personal injury or damage caused by any such unauthorized modification.

Important Information About Freestanding Tubs

Rough-in Dimensions – Take measurements of the tub. All printed specifications are +/- ½ inch and subject to change without notice.

Access panel – Many MTI freestanding tub models have a removable access panel for ease of installation of the waste and overflow, as well as deck-mounted valves on select models. Access panel is located on the drain side (rear) of the tub

Fixtures – Mount fixtures on freestanding tub models designed with an integrated deck for valve installation. For all other freestanding tubs, floor- or wall-mounted fixtures are required.

Floor-Mounted – Not all MTI freestanding tubs will accommodate stabilization of a floor-mounted faucet, however, many faucet kits can be secured to a wall rather than the tub or drain pipe. Contact the faucet kit manufacturer for alternate installation instructions.

Rough-In Chart For Freestanding Tubs

MTI Recommends using clear 100% silicone sealant. Do Not use plumber's putty.

Most of these tub models come with an access panel behind the waste and overflow for ease of installation[1], however access from below tub is recommended.[2] A box-out in the floor is required to accommodate the drain assembly.

Reliance Freestanding Rough-ins

Model #	A	B
MBCRFS6632	3¾"	10½"
MBOFS6636	2¾"	8"
MBOFS6636A	2"	8"
MBOFSX6636	5½"	11¼"
MBOFSX6636A	5½"	11¼"
MBRFSX6636	5½"	12"
MBRFSX6636A	5½"	11¼"
MBXFSX5832A	6½"	12"
MBXFSX5832C	5	12½"

Exclusives Freestanding Rough-ins

Model #	A	B
Winston WSX6636A	5½"	11¼"
Windy WS6636A	2	8"

Integrated Drain Rough-Ins

Model #	X
MBLX6032	11"
MBLX6636	12¼"

These tub models are designed to conceal the overflow pipe between the walls of the tub.

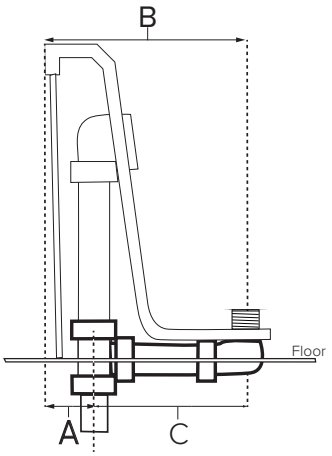

Standard Drain Waste & Overflow configuration

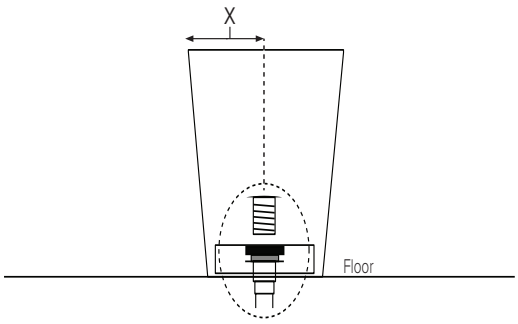

Integrated Drain Waste & Overflow configuration

[1] MTI will not be responsible for any costs involved with removing or reinstalling the tub due to leaks associated with drain or valve installation.
[2] Failure to check floor for flat and level surface could result in improper drainage of the bath.

Plumbing Installation Instructions

MTI recommends using a professional installer for this product. Installer/product owner is responsible for complying with all state and local codes.

Drain Installation

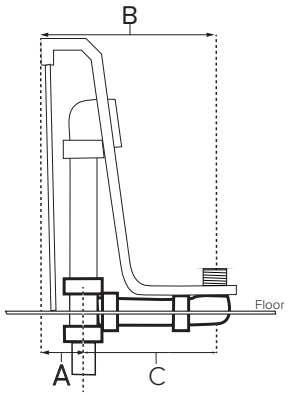

Standard Waste And Overflow Configuration

Check order details and tub specifications for drain type and rough-in location.

Standard Waste & Overflow

Most MTI drop-in tub models will accommodate a standard waste and overflow. Use product specification sheets or measure drain distance on tub to determine size and location of rough-in.

Integrated Overflow with Toe-Tap

MTI Tubs with an integral overflow come with a toe tap drain kit and straight PVC drain fitting. Plan P-trap location directly below tub drain.

The tapered side of the drain gasket will make contact with the bottom of the tub. Be sure to use the provided no-grip disc between the gasket and the drain fitting to avoid twisting gasket while tightening.

CAUTION: DO NOT overtighten and DO NOT exceed 7ft-lbs maximum. Product damage will occur.[1]

MTI Recommends using clear 100% silicone sealant. Do Not use plumber's putty

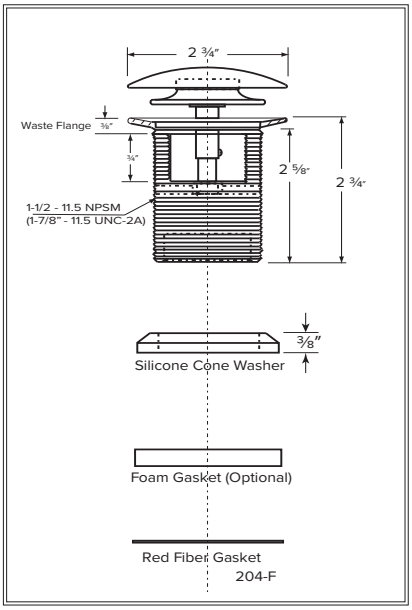

Toe-Tap with Integrated Overflow Drain Assembly

Below are instructions for drain installation of any Reliance® tub. Freestanding tubs are designed to install on top of the finished floor. Many freestanding models come with an access panel behind the waste and overflow for ease of installation. Most tub models, whether freestanding or drop-in, require access from below to finalize drain installation. If there is no access from below, the installation can be more difficult. Some Reliance tubs are designed to accommodate an above-the-floor drain installation. Check product specification sheet for details.

With Access From Below (Recommended)

1. Install drain on tub. Dry fit to properly-sized drain pipe. Apply clear silicone under waste flange.
2. Set tub[2] and connect drain from below floor. Make sure tub drain aligns with rough-in and secure to P-trap.[1]
3. Fill tub to overflow, allowing water to stand for 30 minutes. Check carefully for any leaks.

NOTE: Allow time for silicone to cure before water testing. Many products are ready to test in as little as 30 minutes. Refer to product label for details.

4. Allow silicone to dry 24 hours before regular use.

Without Access From Below

1. Stub out drain and P-trap with 1 ½ schedule 40 PVC pipe at least 1" above finished floor. Trim waste pipe to proper height.
2. Box out around the pipe to allow trimming this pipe below grade upon installation.

WARNING: DO NOT let tub rest on drain plumbing.

3. Before setting tub, prepare waste pipe and drain fitting with PVC cement. Make sure tub drain, gasket and flange align with rough-in.
4. Set tub[2] and connect drain.[1]

NOTE: 2x4s may be used to lower freestanding tub to finished floor.

5. Fill tub to overflow, allowing water to stand for 30 minutes. Check carefully for any leaks.
6. Allow silicone to dry 24 hours before use.

[1] MTI will not be responsible for any costs involved with removing or reinstalling the tub due to leaks associated with drain or valve installation.
[2] Failure to check floor for flat and level surface could result in improper drainage of the bath.

Plumbing Installation Instructions

Access panel comes standard on tub models with integral faucet deck and optional virtual spout.

Deck Mounted Valves

1. Tub material may be drilled using carbide hole saw.
2. Mark the planned location of each valve on the faucet deck.
3. On freestanding tubs, install valves on integral faucet deck through access panel. See valve manufacturer's installation instructions. If the freestanding tub has an integral faucet deck and does not have an access panel, tub is designed for valve installation from underneath. Be sure to protect the tub shell when gaining access to the underside of the tub.

BEFORE DRILLING: Dry fit valve trim to ensure proper fit and clearance.

4. MTI recommends the use of braided stainless steel supply lines for best fit between the walls of a freestanding tub.
5. Water test all supply line and valve connections for leaks prior to final installation.[1]

Virtual Spout Connection

Optional Virtual Spout is factory installed in the tub wall and intended for use as a tub filler in lieu of a traditional faucet or filling spout. Mixing valves are not supplied with the Virtual Spout. The Virtual Spout is installed below the water level of the tub. Special consideration is needed to prevent backflow into the fresh water supply. The Virtual Spout comes with a Wilkins Dual Check Valve[2] installed inline to prevent backflow **(Fig. 2)**.

A Cash Acme® in-wall vacuum breaker[3] ships with all tubs ordered with the Virtual Spout. The provided vacuum breaker requires access through the wall and a spill tray. Some areas of the country require additional backflow prevention above the water line of the tub **(Fig. 3)**. Check local codes, as some areas of the country require a deck-mounted backflow prevention device.

1. MTI recommends the use of braided stainless steel supply lines between the walls of a freestanding tub for best fit of customer-supplied mixing valves.
2. Tee the hot and cold supply lines before connecting to the stub out on the tub
3. Connect mixed supply line to the Wilkins dual check valve that is factory installed between the walls of the tub. Access panel behind drain location on freestanding tubs facilitates connection to Virtual Spout stubout. If the freestanding tub does not have an access panel, stubout is accessible underneath the tub. Be sure to protect the tub shell when gaining access to the underside of the tub.
4. Water test for leaks all supply line and valve connections prior to final installation.

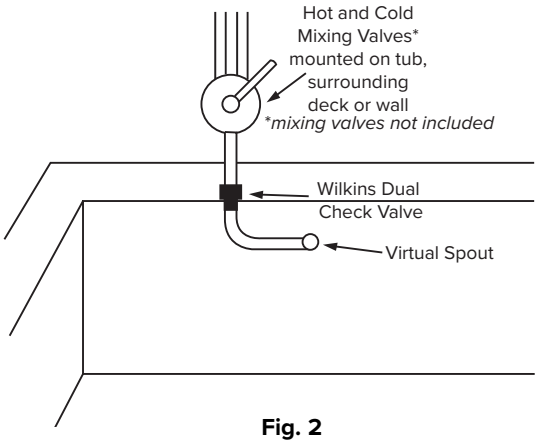

Fig. 2

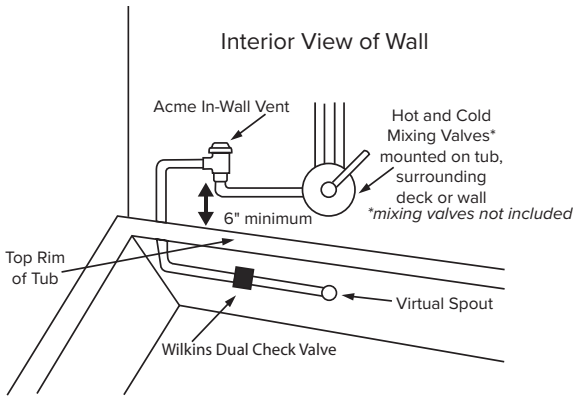

Fig. 3

[1] MTI will not be responsible for any costs involved with removing or reinstalling the tub due to leaks associated with drain or valve installation.
[2] Wilkins Dual Check Valve, model 700XL, ASSE® Listed 1024. CSA® Certified CSA B64.6)
[3] Anti-siphon Cash Acme Vacuum Breaker ASSE1001/CSA B64.1.1

Drop-In / Undermount / Alcove Installation Guidelines

Measure actual tub prior to building any structure(s) for the tub. All printed specifications for MTI tubs have ± ½" tolerance and are subject to change at any time. MTI Baths, Inc. is not responsible for any preparatory labor or material charges. Additional access to plumbing fixtures is strongly recommended. It is the responsibility of the installer to provide access to pump and plumbing in compliance with local plumbing codes.

Important Tub Measurements

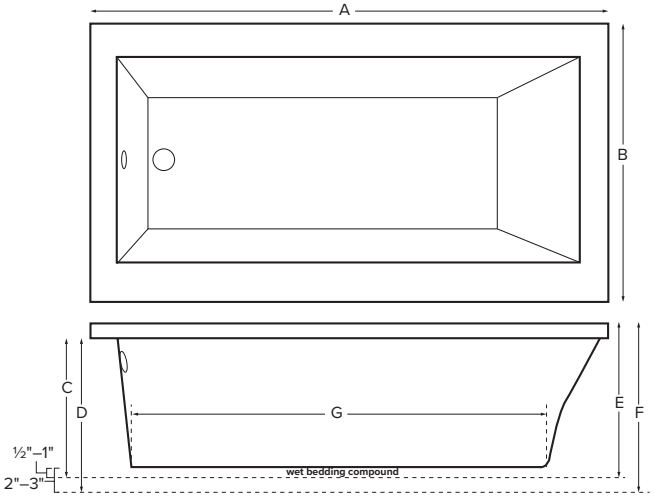

End Drain

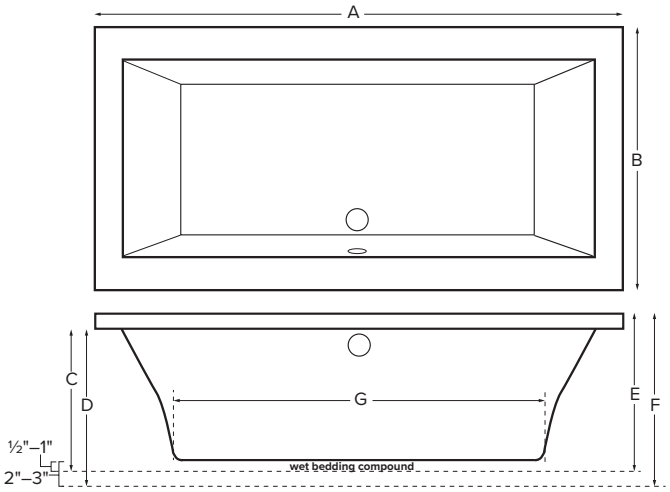

Center Drain

Some installations may require different methods than the following instructions. However, framing should always provide a level surface for the rim of the tub in both directions and sufficient space for bedding compound underneath the full length of the tub (G). Never let the rim of the tub bear the weight of the tub.

MTI tubs are not equipped with leveling feet. MTI recommends Quikrete #1103 sand/topping mix or equivalent as bedding compound.[1] Plaster or sheet rock mud are NOT sufficient bedding compounds.

NOTE: Airbaths and tubs equipped with optional pre-leveled frame and foam base negate the need to wet bed when installing on a flat and level surface. Foam base adds 2"-3" to the overall height of a drop-in/undermount tub (F).

IMPORTANT: Plan for access to each pump, blower and/or electrical component. DO NOT allow any material such as insulation within 8" of pump. Pump and blower must have sufficient air space surrounding them for circulation.

Alcove / Skirted Tub Installation

1. Remove any wooden blocks from under tub prior to install.
2. Level tub at the rim in both directions (front-to-back and side-to-side), leaving 1/2"-1" void under tub for bedding compound.
3. Mark level line on stud walls at tub height (C).
4. Install top of stringer at the marked line. Construct frame across the front of the tub at the same height as the stingers for skirt, tile or other material.
5. Install drain components per manufacturer's instructions. General drain installation guidelines can be found in this manual on pg. 8.
6. Prepare wet bed, unless tub is equipped with optional factory-installed foam base and is being installed on a flat and level surface (a small amount of thin-set is recommended to level uneven floor).
7. Before bedding sets, carefully work tub into it, shifting side-to-side, until tub is in planned level position. Use care not to damage any plumbing, electrical components or wiring when moving and bedding the tub. **NOTE:** Tub will not drain properly if not leveled at the rim.
8. Drill 1/8" pilot holes through the tile flange at each stud location. Shim as needed. Secure tile flange to stud wall with screws. DO NOT use nails.

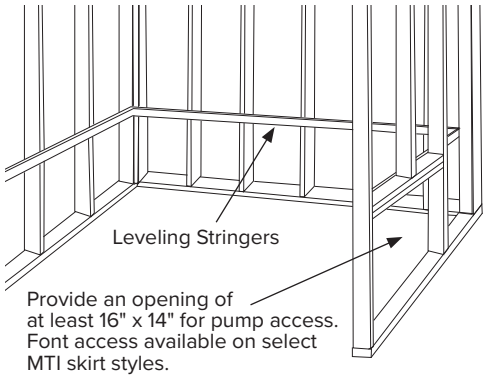

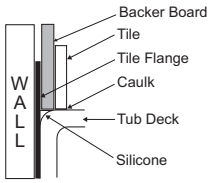

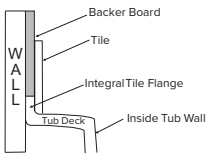

[1] Failure to check floor for flat and level surface could result in improper drainage of the bath.

Drop-In / Undermount / Alcove Installation Guidelines (continued)

IMPORTANT: Plan for access to each pump, blower and/or electrical component. DO NOT allow any material such as insulation within 8" of pump. Pump and blower must have sufficient air space surrounding them for circulation.

Drop-In / Framed Box Installation

Opening should be no less than 1"-1½" smaller than the exterior dimensions (A) and (B) of the tub deck.

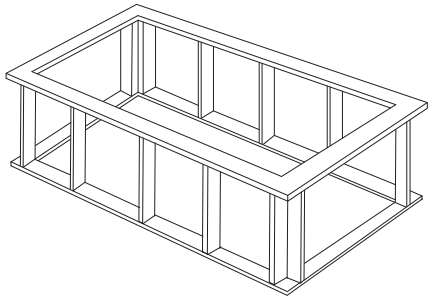

NOTE: It is best to have as large an opening as possible to clear the plumbing and other system components. Full size templates available from MTI for oval and odd shaped tubs.

1. Construct level framing at proper drop-in tub height plus ½"–1" for wet bedding compound (C). If tub is equipped with factory-installed pre-leveled foam base, use height (D).[1]

IMPORTANT: The bottom of the tub must be fully supported with bedding compound (G). Under no circumstances should the tub "hang" by the top flange.

2. Level subfloor with floor leveling compound or thin-set before installing frame.
3. When floor leveling compound is dry, secure frame to the floor and any surrounding stud walls before setting tub.
4. Install drain components per manufacturer's instructions. Drain installation guidelines can be found in this manual on pg. 8.
5. Prepare wet bed for entire length of tub (G), unless tub is equipped with factory-installed foam base.
6. Set tub, shifting side-to-side, until it is in planned level position. Use care not to damage any plumbing, electrical components or wiring when moving and bedding the tub. **NOTE:** Tub will not drain properly if not leveled at the rim.

Undermount / Framed Box Installation

MTI does not make recommendations as to the size and shape of the opening for undermount installation. Do NOT use any templates supplied by MTI for undermounting. Template actual tub bowl dimensions very carefully before building or cutting any deck materials. MTI Baths, Inc. is not responsible for any preparatory labor or material charges.

1. Construct level framing at overall tub height plus ½"–1" for wet bedding compound (E). If tub is equipped with factory-installed pre-leveled foam base, add 2"–3" for foam base to measurement (F). At the proper height, the top of the frame will be even with the tub deck on a level surface.[1]
2. Construct additional framing around the tub to support the weight of overhanging tile/deck material. If using solid surface material that covers only the width of the tub flange, additional support is not necessary.
3. Level subfloor with floor leveling compound or thin-set before installing frame.
4. When floor leveling compound is dry, secure frame to the floor and any surrounding stud walls before setting tub.
5. Install drain components per manufacturer's instructions. General drain installation guidelines can be found in this manual on pg. 8.
6. Prepare wet bed for entire length of tub (G), unless tub is equipped with factory-installed foam base.
7. Set tub, shifting side-to-side, until it is in planned level position and top of tub deck is even with the top of the frame. Use care not to damage any plumbing, electrical components or wiring when moving and bedding the tub. **NOTE:** Tub will not drain properly if not leveled at the rim.

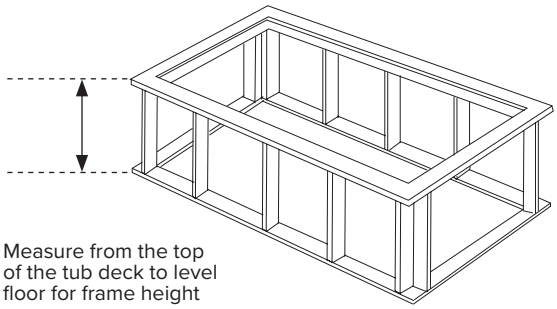

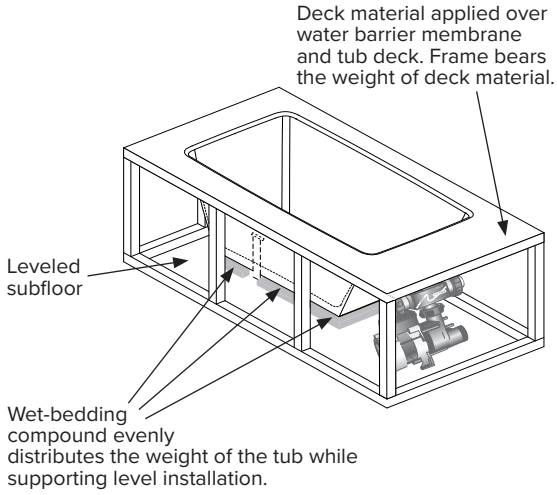

[1] Failure to check floor for flat and level surface could result in improper drainage of the bath.

Operation Instructions

Push Button

Reliance hydrotherapy tubs are equipped with a factory-installed on/off push button. An external switch is not required.

Airbath

The airbath has three speeds (the startup speed is high).

1st Press High
2nd Press Medium
3rd Press Low
4th Press Off (activates automatic purge cycle)

The automatic purge system is designed to dry out the air jets and keep the system clean. The purge cycle will start 20 minutes after the airbath is turned off and will run for approximately 1-2 minutes.

Whirlpool

Always fill bath to 1" above highest jet level before activating whirlpool. Starting motor without water in the tub could result in damage to the pump and internal seals, voiding the product warranty.

1st Press On (do not start pump until tub has been filled above highest jet level)
2nd Press Off

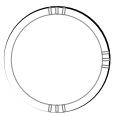
Air Volume Control

Whirlpool jets operation (air volume control)

ADJUSTMENT: Rotate the control counter-clockwise to increase the amount of air and pressure in the system.

Cleaning Instructions For Systems

Airbath: The automatic purge will activate after turning the airbath on and off. For optimal maintenance, MTI recommends manually activating the purge cycle after every shower or soaking bath.

- Allow all water to drain from tub
- Press on/off button to activate air system
- Press button three more times (cycling through medium and low speeds) to turn off air system
- The purge cycle will start 20 minutes after the airbath is turned off and will run for approximately 1-2 minutes.

See pg. 13 for surface cleaning instructions.

Whirlpool: MTI recommends cleaning the whirlpool system every 30 days, not to exceed 90 days between cleanings.

- Fill tub with warm water 2" above the highest jet level
- Add one of the following to the bath water:
  - ¼ cup MTI Baths Fresh Wave Cleaning Solution
  - 1 cup vinegar
  - Several drops of a low sudsing detergent
- Turn on the system and let run for five minutes. Let stand for 15 minutes.
- Drain the tub and refill with cold water above highest jet level.
- Restart the system and let run for 1–2 minutes, then drain.
- Rinse interior of tub thoroughly.

Only use non-chlorine-based whirlpool or spa cleaning products. Always use products according to the manufacturer's label.

See pg. 13 for surface cleaning instructions.

Care and Cleaning Instructions — Acrylic CXL™

About the Acrylic Shell

Cast acrylic is a stain-resistant, non-porous material. With normal use, the acrylic will retain its inherently glossy appearance with only a minimal amount of care.

When Cleaning

- Remove dust and dry dirt with a soft, damp cloth.
- Apply common household, non-abrasive cleaner in accordance with manufacturer's directions and precautions. (i.e., a mild dishwashing detergent such as Ivory Liquid). Do not use unless the product label specifically states that it is safe for acrylic.
- Rinse well and dry with a soft, clean cloth. Scouring pads will deteriorate the finish.
- Never use any type of "scrubbing bubbles" or aerosol spray cleaners on your acrylic product.
- Harsh chemicals, such as bleach and ammonia, will deteriorate the finish.
- Never use abrasive cleansers. If any product feels gritty when rubbed between your fingers, do not use on the acrylic surface or system controls as permanent damage will occur.

WARNING: Check cleaning and bathing product labels. Do not use unless the product label specifically states that it is safe for acrylic. Some non-abrasive products damage the acrylic over time.

General Care

- Do not allow your cast acrylic surface to come into contact with nail polish, nail polish remover, Wintergreen oil, dry cleaning solution, lacquer thinners, gasoline, pine oil, etc.
- Avoid using razor blades or other sharp objects that might scratch the surface.
- Small scratches can be removed by applying a thin coat of automotive polishing liquid and buffing lightly with a clean cloth. For deeper scratches, sand the surface lightly with a 400 grit "wet or dry" paper and buff with a fine grit buffing compound.
- MTI strongly recommends a professional surface repair person for deep scratches, chips or gouges.
- Damage occurring to the unit during installation is the responsibility of the installer, and after installation, the responsibility of the user.

Troubleshooting

Q: The pump or blower will not turn on. What should I check first?
A: Check the breaker and reset GFCI receptacle. A hairdryer or low-voltage lamp may be used to test the outlet. If operation is not restored, contact MTI for support.

Q: There is a leak at the pump when it's turned on. How do we stop the leak?
A: Check the rubber o-rings for proper seating. Tighten the large union nuts on the pump. Do not over tighten.

Q: The whirlpool jets do not seem to have much force. How can I adjust?
A: Twist open the air volume control on the top or side wall of the tub.

Q: How can I check that my in-line heater is working?
A: The indicator light on the top of the heater will glow when it is functioning properly. The in-line heater is designed to maintain bathing water temperature (not to exeed 104°F) and will not heat cold or cool water.

Q: There is a rust colored, greasy ring in my bath tub. What causes this?
A: The condition results from sediment in the water heater of the home. Drain and flush the heater according to the manufacturer's instructions, and then clean the interior of the tub with a mild, grease-cutting dish soap.

Q: Some or all of the air jets on my tub are not blowing air bubbles. What could be the problem?
A: Some of the air jets can become clogged from construction debris, such as sheet rock dust, during installation. Fill the tub with several inches of warm water. Add 3–4 ounces of CLR. Use only the CLR Bath Cleaner, not other CLR products. Let stand for 30 minutes. Using a small soft brush, gently clean each non-functioning jet. **DANGER!** Rinse thoroughly. Do not turn on the air system with cleaning solution in tub. Always wear proper eye protection when using caustic chemicals. Follow product label safety precautions.

Q: The air bubbles seem cool. How do I check that the blower is warming the air?
A: The heated blower is designed to preheat the incoming air and will not heat the bath water. It is recommended to adequately insulate the wall(s) against which the tub is installed in order to minimize heat loss. Do not insulate the blower; sufficient air space is required for proper circulation and operation. Turn the air system on high for 4–5 minutes to verify the air is warm (you do not need to have water in the tub). Carefully feel the PVC pipe at the blower nozzle. It should be warm to the touch. If it is cold, contact MTI for support.

Q: Is it safe to use bath salts or bath oils in my air bath?
A: Water soluble products such as bath salts are fine to use. Avoid bath bombs that contain glitter. Use of bath oils is not recommended. If bath oil is used, refer to the cleaning section of the manual for proper cleaning instructions. Products containing natural or chemical dyes may discolor the jets and controls. Always use bath products according to the product label.

Q: How can I get scratches out of my tub?
A: Most scratches can be buffed out using readily-available and easy-to-use products (see Care and Cleaning section for more repair information). Deeper scratches and chips may require the services of a professional repair technician.

Q: How do I find the serial or registration number on my bath?
A: The registration number can be found on a silver sticker adhered to the backrest 3-4 inches above the motor location.

NOTES

MTI Baths, LLC

Residential Limited Two-Year Product Warranty[1]

MTI Baths is proud to offer the Residential Limited Two-Year Product Warranty set forth below for Reliance® Collection bathtubs (the "Products"). This Limited Warranty is in lieu of all other warranties.

Application: This Limited Warranty applies solely to Products purchased from an authorized MTI Baths distributor or retailer after March 1, 2023 and installed in the United States. This warranty is product specific and extends only to the original consumer/purchaser of the MTI Baths Product. Original purchase and installation must be within the boundaries of the continental USA[2]. The warranty terminates after transfer of ownership or if the product is installed or relocated outside the boundaries of the continental USA by the original consumer/purchaser prior to the expiration of the warranty period. Warranty coverage begins from date of purchase. Proof of purchase must be provided to MTI Baths upon request. Display floor models and overstock sale units are excluded from this Limited Warranty. Drain kits and accessories that are not manufactured by MTI are excluded from this product warranty.[3] Accessories manufactured by MTI Baths carry a one year warranty for parts only.

Two-Year Warranty: MTI Baths warrants that its Products are free of defects in material and workmanship for two years from date of purchase to original purchaser so long as (1) the Product is installed, maintained and used according to MTI Baths' recommended installation and maintenance procedures and usage instructions, and (2) use of the Product is limited to personal, family or single household purposes. Product installation location must be an indoor, climate-controlled, residential environment.

> **Shell:** MTI Baths (MTI) warrants the shell of the acrylic tub against defects in material and workmanship for two years from date of purchase to original purchaser. Variations in resin/fiberglass thickness on the underside of the bath are not considered defects and do not affect the performance, integrity or quality of the product.
>
> **Hydrotherapy:** The non-pro-rated two-year warranty covers parts and labor for the pump, motors, blowers and factory-installed plumbing included with MTI Hydrotherapy Package content against defects in material or workmanship. All controls and mechanisms are subject to the One-Year (Parts Only) warranty described below. Also warranted for one year (parts only) are electrical components included with optional therapies (e.g. thermal therapy).
>
> **One-Year (Parts Only) Warranty:** MTI warrants all Reliance® Collection hydrotherapy components not specified above for one year (parts only) against defects in material or workmanship.
>
> Replacement parts shall assume the remaining warranty period of the parts replaced, and are subject to availability and may differ from those originally supplied. Changes in materials, parts or specifications are not valid reasons for product refusal or replacement under warranty.

Exclusions: This Limited Warranty does not apply to or cover defects, damage or other failures that are the result of normal wear and tear of Products, unauthorized or unreasonable use or improper handling; caused by freight carriers, installers, users or other persons; or accidents or acts of God (e.g. earthquakes, floods, storms). MTI is not responsible for the cost of removing or reinstalling the Product or costs associated with any adjacent materials. Changes in materials, parts or specifications are not valid reasons for product refusal or replacement under warranty claims.

MTI Baths is not responsible for any damage caused by failure to follow Product instructions; neglect by the user during use of the Product; incorrect operation; lack of proper routine maintenance; the use of improper cleaners, abrasives, food, beverages (e.g., red wine), bathing products with harmful dyes or other contents (e.g., glitter), medicinal products (e.g., mecurochrome), make-up or hair dye; cigarette burns or burns from hot appliances; or misuse of any kind. MTI does not warrant leaks associated with improper waste and overflow installation or connections supplied by the installer. This warranty does not cover noises that result from poorly located or improperly installed or maintained plumbing vents. Improper installation of, or any alteration, customization or modification to the Product voids this Limited Warranty in its entirety. MTI Baths is not responsible for any damages caused by filling or overfilling a bathtub or by leaving a full bathtub unattended[4].

The Product must be water tested for proper drainage, system operation, and leak detection prior to final installation and installed per the installation instructions provided. Failure to do so will void this warranty.

MTI BATHS IS NOT LIABLE FOR INCIDENTAL OR CONSEQUENTIAL DAMAGE, LOSS OF TIME, INCONVENIENCE, INCIDENTAL EXPENSES, LABOR OR MATERIAL CHARGES OR ANY OTHER COSTS RELATED TO THE APPLICATION OF THIS WARRANTY.

---

[1] Commercial customers please refer to our Commercial Limited One-Year Warranty.

[2] Exceptions for Alaskan and Canadian Customers: MTI Baths extends the complete Limited Two-Year Residential Warranty to any mineral composite tub installed within a 75-mile radius of an Authorized MTI Distributor. Any installation site outside the 75-mile radius will be covered for two years, parts only. Exceptions for Hawaiian Customers: MTI Baths extends the complete Limited Two-Year Residential Warranty to Hawaiian customers on the islands of Maui, Kauai and Oahu only. All other locations will be covered for two years, parts only.

[3] Many drain kits and accessories carry a factory warranty direct from the manufacturer. Terms vary among manufacturers. Special order finishes for drain kits are excluded from this product warranty.

[4] Never leave a full bath or filling bath unattended.

Continued on next page...

MTI Baths

Residential Limited Two-Year Product Warranty*

Warranty Claim Process: All claims under the Limited Warranty must be submitted in writing to MTI Baths within 10 days following discovery of the basis of the claim. All such claims must be submitted to service@mtibaths.com to obtain authorized service. Each claim must set forth the date of discovery, a description of the defect, the name and address of the installer of the Product, the date and address of installation, and the type or style of the Product.

The product warranty must be registered within one hundred twenty days from purchase. The product warranty must be registered before service for any malfunction or defect can be authorized. Registration can be completed online at mtibaths.com/contact-us/warranty-registration/ or mailed to MTI Baths at 670 N. Price Rd. Sugar Hill, Georgia 30518. Any claim submitted via an alternative method or without the required information shall be null and void.

Damage that occurred in transit is the responsibility of the carrier. The consignee must open and inspect the Product for damage when it is delivered. If the Product is damaged, this must be reported immediately to both the seller and the carrier in writing and an inspection must be requested. In the event that the carrier fails to respond, report such response to both the seller and the carrier. Any freight claims must be filed within ten business days. The installer(s) or person(s) (Consignee) acting on behalf of the Product owner is responsible for ensuring that the Product is free of defect or damage prior to installation. The Product Owner or Consignee must open and inspect the Product for damage when it is delivered. Product damage must be reported prior to installation.

Warranty Performance/Limited Remedy: As the sole and exclusive remedy, and MTI Baths' sole liability, for breach of the Limited Warranty, MTI Baths, will, at its election, repair, replace or make appropriate adjustments to the Product. MTI reserves the right to inspect the malfunction or defect on site and repair or replace the Product at its discretion. In all cases a reasonable time must be allowed for commencement and completion of warranty repairs, replacements, or adjustments. Repairs will be made by an authorized MTI Baths repairer. Replacement parts and/or repair services authorized under the terms of this warranty will result in the issuance of a service order number. No payment for services rendered will be made by MTI Baths without an MTI authorized service order.

MTI Baths will not authorize any service unless clear access is available. MTI is not responsible for the provision of proper access. A minimum size of 16”x14” access to each component on the Product must be provided. Access from a crawlspace or incomplete access to all equipment may result in warranty claims being denied.

MTI cannot guarantee that Product currently in use will be available in the future. Product replacement is subject to availability. Replacement Products may differ from those originally supplied.

Labor Not Included: MTI Baths is not responsible for labor charges or other charges related to the removal or installation or other costs involved in repairing or replacing the Product or the expense of shipment to or from the factory, except where provided by applicable law.

To obtain further information about this Limited Warranty and MTI Baths' warranty obligations please contact the MTI Service Department at 800.783.8827 or email service@mtibaths.com. Must have registration number available.

No other company or person has any authority to make any warranties or representations concerning MTI Baths or any Products. Accordingly, MTI Baths is not responsible for any such warranties or representations.

THIS LIMITED WARRANTY IS THE SOLE WARRANTY FOR THE MTI BATHS PRODUCT AND IS IN LIEU OF ALL OTHER WARRANTIES, EXPRESSED OR IMPLIED, RELATING TO SUCH PRODUCT INCLUDING WITHOUT LIMITATION ANY IMPLIED WARRANTIES OF CONDITION, MERCHANTABILITY, DESIGN, OPERATION OR FITNESS FOR ANY PARTICULAR USE OR PURPOSE, OR QUALITY OF THE MATERIALS OR WORKMANSHIP.

Disclaimers: MTI Baths is not liable for special, incidental or consequential damages/losses from any cause, including water damage to carpeting, floors, or ceilings.

SOME STATES DO NOT ALLOW THE EXCLUSION OR LIMITATION, IN WHOLE OR IN PART, OF WARRANTIES OR THE EXCLUSION OF SPECIAL, CONSEQUENTIAL OR INCIDENTAL DAMAGES. THEREFORE, THE ABOVE LIMITATIONS OR EXCLUSIONS MAY NOT BE APPLICABLE TO YOU.

Customer Service
Monday-Friday
8am-6pm EST

To verify coverage or request service, please contact the MTI Service Department and have serial or registration number available.

800-783-8827
service@mtibaths.com

MTI Baths, LLC

Commercial Limited One-Year Product Warranty[1]

MTI Baths is proud to offer the Commercial Limited One-Year Product Warranty set forth below for Reliance® Collection bathtubs (the "Products"). This Limited Warranty is in lieu of all other warranties.

Application: This Limited Warranty applies solely to Products purchased from an authorized MTI Baths distributor or retailer after March 1, 2023 and installed in the United States. This warranty is product specific and extends only to the original consumer/purchaser of the MTI Baths Product. Original purchase and installation must be within the boundaries of the continental USA[2]. The warranty terminates after transfer of ownership or if the product is installed or relocated outside the boundaries of the continental USA by the original consumer/purchaser prior to the expiration of the warranty period. Warranty coverage begins from date of purchase. Proof of purchase must be provided to MTI Baths upon request. Display floor models and overstock sale units are excluded from this Limited Warranty. Drain kits and accessories that are not manufactured by MTI are excluded from this product warranty.[3] Accessories manufactured by MTI Baths carry a one year warranty for parts only.

One-Year Warranty: MTI Baths warrants that its Products are free of defects in material and workmanship for one year from date of purchase to original purchaser so long as (1) the Product is installed, maintained and used according to MTI Baths' recommended installation and maintenance procedures and usage instructions, and (2) use of the Product is limited to personal, family or single household purposes. Product installation location must be an indoor, climate-controlled, residential environment.

> **Shell:** MTI Baths (MTI) warrants the shell of the mineral composite tub against defects in material and workmanship for one year from date of purchase to original purchaser. Slight variations in the surface are indigenous to the natural stone appearance and do not compromise the structural integrity of the product, therefore are not considered defects or flaws. Blemishes, air holes or casting marks on the underside of the bath are not considered defects and do not affect the performance or quality of the product.
>
> **Hydrotherapy:** The non-pro-rated two-year warranty covers parts and labor for the pump, motors, blowers and factory-installed plumbing included with MTI Hydrotherapy Package content against defects in material or workmanship. All controls and mechanisms are subject to the One-Year (Parts Only) warranty described below. Also warranted for one year (parts only) are electrical components included with optional therapies (e.g. thermal therapy).
>
> **One-Year (Parts Only) Warranty:** MTI warrants all Reliance® Collection hydrotherapy components not specified above for one year (parts only) against defects in material or workmanship.
>
> Replacement parts shall assume the remaining warranty period of the parts replaced, and are subject to availability and may differ from those originally supplied. Changes in materials, parts or specifications are not valid reasons for product refusal or replacement under warranty.

Exclusions: This Limited Warranty does not apply to or cover defects, damage or other failures that are the result of normal wear and tear of Products, unauthorized or unreasonable use or improper handling; caused by freight carriers, installers, users or other persons; or accidents or acts of God (e.g. earthquakes, floods, storms). MTI is not responsible for the cost of removing or reinstalling the Product or costs associated with any adjacent materials. Changes in materials, parts or specifications are not valid reasons for product refusal or replacement under warranty claims.

MTI Baths is not responsible for any damage caused by failure to follow Product instructions; neglect by the user during use of the Product; incorrect operation; lack of proper routine maintenance; the use of improper cleaners, abrasives, food, beverages (e.g., red wine), bathing products with harmful dyes or other contents (e.g., glitter), medicinal products (e.g., mecurochrome), make-up or hair dye; cigarette burns or burns from hot appliances; or misuse of any kind. MTI does not warrant leaks associated with improper waste and overflow installation or connections supplied by the installer. This warranty does not cover noises that result from poorly located or improperly installed or maintained plumbing vents. Improper installation of, or any alteration, customization or modification to the Product voids this Limited Warranty in its entirety. MTI Baths is not responsible for any damages caused by filling or overfilling a bathtub or by leaving a full bathtub unattended[4].

The Product must be water tested for proper drainage, system operation, and leak detection prior to final installation and installed per the installation instructions provided. Failure to do so will void this warranty.

MTI BATHS IS NOT LIABLE FOR INCIDENTAL OR CONSEQUENTIAL DAMAGE, LOSS OF TIME, INCONVENIENCE, INCIDENTAL EXPENSES, LABOR OR MATERIAL CHARGES OR ANY OTHER COSTS RELATED TO THE APPLICATION OF THIS WARRANTY.

[1] Residential customers please refer to our Residential Limited Two-Year Warranty.

[2] Exceptions for Alaskan and Canadian Customers: MTI Baths extends the complete Limited One-Year Commercial Warranty to any mineral composite tub installed within a 75-mile radius of an Authorized MTI Distributor. Any installation site outside the 75-mile radius will be covered for one year, parts only. Exceptions for Hawaiian Customers: MTI Baths extends the complete Limited One-Year Commercial Warranty to Hawaiian customers on the islands of Maui, Kauai and Oahu only. All other locations will be covered for one year, parts only.

[3] Many drain kits and accessories carry a factory warranty direct from the manufacturer. Terms vary among manufacturers. Special order finishes for drain kits are excluded from this product warranty.

[4] Never leave a full bath or filling bath unattended.

Continued on next page...

MTI Baths

Residential Limited One-Year Product Warranty*

Warranty Claim Process: All claims under the Limited Warranty must be submitted in writing to MTI Baths within 10 days following discovery of the basis of the claim. All such claims must be submitted to service@mtibaths.com to obtain authorized service. Each claim must set forth the date of discovery, a description of the defect, the name and address of the installer of the Product, the date and address of installation, and the type or style of the Product.

The product warranty must be registered within one hundred twenty days from purchase. The product warranty must be registered before service for any malfunction or defect can be authorized. Registration can be completed online at mtibaths.com/contact-us/warranty-registration/ or mailed to MTI Baths at 670 N. Price Rd. Sugar Hill, Georgia 30518. Any claim submitted via an alternative method or without the required information shall be null and void.

Damage that occurred in transit is the responsibility of the carrier. The consignee must open and inspect the Product for damage when it is delivered. If the Product is damaged, this must be reported immediately to both the seller and the carrier in writing and an inspection must be requested. In the event that the carrier fails to respond, report such response to both the seller and the carrier. Any freight claims must be filed within ten business days. The installer(s) or person(s) (Consignee) acting on behalf of the Product owner is responsible for ensuring that the Product is free of defect or damage prior to installation. The Product Owner or Consignee must open and inspect the Product for damage when it is delivered. Product damage must be reported prior to installation.

Warranty Performance/Limited Remedy: As the sole and exclusive remedy, and MTI Baths' sole liability, for breach of the Limited Warranty, MTI Baths, will, at its election, repair, replace or make appropriate adjustments to the Product. MTI reserves the right to inspect the malfunction or defect on site and repair or replace the Product at its discretion. In all cases a reasonable time must be allowed for commencement and completion of warranty repairs, replacements, or adjustments. Repairs will be made by an authorized MTI Baths repairer. Replacement parts and/or repair services authorized under the terms of this warranty will result in the issuance of a service order number. No payment for services rendered will be made by MTI Baths without an MTI authorized service order.

MTI Baths will not authorize any service unless clear access is available. MTI is not responsible for the provision of proper access. A minimum size of 16”x14” access to each component on the Product must be provided. Access from a crawlspace or incomplete access to all equipment may result in warranty claims being denied.

MTI cannot guarantee that Product currently in use will be available in the future. Product replacement is subject to availability. Replacement Products may differ from those originally supplied.

Labor Not Included: MTI Baths is not responsible for labor charges or other charges related to the removal or installation or other costs involved in repairing or replacing the Product or the expense of shipment to or from the factory, except where provided by applicable law.

To obtain further information about this Limited Warranty and MTI Baths' warranty obligations please contact the MTI Service Department at 800.783.8827 or email service@mtibaths.com. Must have registration number available.

No other company or person has any authority to make any warranties or representations concerning MTI Baths or any Products. Accordingly, MTI Baths is not responsible for any such warranties or representations.

THIS LIMITED WARRANTY IS THE SOLE WARRANTY FOR THE MTI BATHS PRODUCT AND IS IN LIEU OF ALL OTHER WARRANTIES, EXPRESSED OR IMPLIED, RELATING TO SUCH PRODUCT INCLUDING WITHOUT LIMITATION ANY IMPLIED WARRANTIES OF CONDITION, MERCHANTABILITY, DESIGN, OPERATION OR FITNESS FOR ANY PARTICULAR USE OR PURPOSE, OR QUALITY OF THE MATERIALS OR WORKMANSHIP.

Disclaimers: MTI Baths is not liable for special, incidental or consequential damages/losses from any cause, including water damage to carpeting, floors, or ceilings.

SOME STATES DO NOT ALLOW THE EXCLUSION OR LIMITATION, IN WHOLE OR IN PART, OF WARRANTIES OR THE EXCLUSION OF SPECIAL, CONSEQUENTIAL OR INCIDENTAL DAMAGES. THEREFORE, THE ABOVE LIMITATIONS OR EXCLUSIONS MAY NOT BE APPLICABLE TO YOU.

Customer Service
Monday-Friday
8am-6pm EST

To verify coverage or request service, please contact the MTI Service Department and have serial or registration number available.

800-783-8827
service@mtibaths.com

MTI Baths
670 North Price Road
Sugar Hill, GA 30518
p: (800) 783-8827
f: (800) 438-8827

Made in the USA

mtibaths.com

© Copyright 2025 by MTI Baths, Inc.
Modification Rights Reserved. 0402