MTI SOLUTIONS COLLECTION

Drop-in and Undermount Soaking Tubs

INSTALLATION AND OPERATION MANUAL

Effective November 19, 2024

Installer: this booklet must be given to the product owner.
Please note important information below:

Distributor Name #_____

Model #_____

Manufacturer's Date _____

Serial / Registration #_____

OWNER'S MANUAL AND INSTALLATION GUIDE

Thank you for choosing an MTI bath. You have purchased the best-built acrylic bath in America. We know it will give you many years of pleasure. The instructions in this booklet will provide you with the information you need to install and operate this unit. This information is also available on mtibaths.com. Our customer service department is available to answer any additional questions you may have pertaining to the installation and operation of your bath. Call 800-783-8827 to speak to our Service Department or email customerservice@mtibaths.com. For faster service, please have your warranty registration number (serial number) ready when calling. The registration number can be found on the CSA/UL label adhered to the exterior surface of the tub. For soaking tubs with an inline heater, the sticker is typically placed several inches above the pump. For soaking tubs without an inline heater, the sticker will be placed on the drain side of the tub near the overflow.

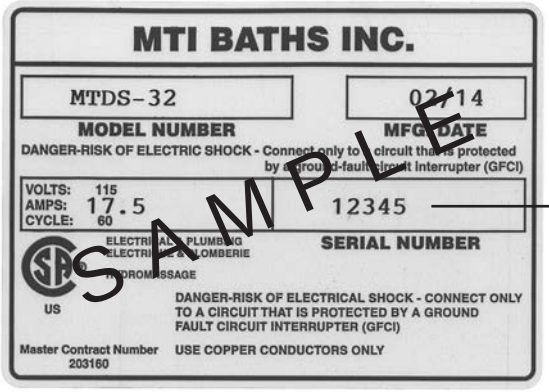

Please locate your serial number and transfer to the front of this book for any future service needs.

IMPORTANT SAFETY INSTRUCTIONS

WARNING: WHEN USING ELECTRICAL PRODUCTS, BASIC PRECAUTIONS SHOULD BE FOLLOWED, INCLUDING THE FOLLOWING:

This manual contains information and instructions for proper operation and maintenance of your MTI bathtub. Failure to follow these instructions could result in personal injury, electrical shock or fire.

INSTRUCTIONS PERTAINING TO RISK OF FIRE, ELECTRIC SHOCK, OR INJURY TO PERSONS.

READ AND FOLLOW ALL INSTRUCTIONS

- Do not permit children to use this unit unless they are closely supervised by an adult at all times. Supervision is also required when bath is used by an elderly or handicapped individual.
- Never leave a full or filling bath unattended.
- Use this unit only for its intended use as described in this manual. Do not use attachments not recommended by the manufacturer. Never drop or insert any object into any opening.

Do not operate this unit without guard over the suction fitting.

The water in a hydrotherapy bath should never exceed 40˚ C (104˚ F). Water temperatures between 38˚ C (100˚ F) and 40˚ C (104˚ F) are considered safe for a healthy adult. Use time should be limited to approximately 10 minutes, followed by a shower to cool down. Longer exposures may result in hyperthermia, which can be fatal. The symptoms of this condition are nausea, dizziness and fainting. Lower water temperatures are recommended for extended use (exceeding 10 - 15 minutes) and for young children.

Since excessive water temperatures have a high potential for causing fetal damage during the early months of pregnancy, pregnant or possibly pregnant women should limit hydrotherapy bath water temperatures to 38˚ C (100˚ F).

The use of drugs or alcoholic beverages before or during hydrotherapy bath use may lead to unconsciousness with the possibility of drowning. Never use the hydrotherapy bath while under the influence of alcohol, anticoagulants, stimulants, antihistamines, vasoconstrictors, vasodilators, hypnotics, narcotics or tranquilizers.

Persons with a medical history of heart disease, low or high blood pressure, circulatory system problems, or diabetes should consult a physician before using a hydrotherapy bath.

Persons using medication should consult a physician before using a hydrotherapy bath since medication may induce drowsiness while other medication may affect heart rate, blood pressure and circulation.

DANGER: To reduce the risk of injury, enter and exit the bath slowly.

WARNING: Never operate electrically connected devices in or within 5' of the bath. Never drop or insert any object into any opening within the hydrotherapy bath.

DANGER: Risk of electric shock. Connect only to circuits protected by a Ground Fault Circuit Interrupter (GFCI). Such a device should be installed by a licensed electrician and should be tested on a regular basis (at least monthly). To test the GFCI push the TEST button. The GFCI should interrupt the power. Push the RESET button and the power should be restored. If the GFCI fails to operate in this manner there is the possibility of an electric shock. DO NOT USE. Disconnect the unit and have the problem corrected by a qualified service technician. To avoid the possibility of personal injury and discoloration of the acrylic surface, the inlet water temperature should not exceed 60˚ C (140˚ F).

DANGER: Disconnect power before servicing.

A pressure wire connector is provided on the exterior of the pump or control within this unit to permit connection of a bonding conductor between this unit and all other exposed metal in the vicinity, as needed to comply with local requirements.

INSTALLER/OWNER BEARS ALL RESPONSIBILITY TO COMPLY WITH ALL STATE AND LOCAL CODES WHEN INSTALLING THIS PRODUCT.

IMPORTANT! WHEN REQUIRED BY LOCAL CODES, INSTALL A RPZ (REDUCED PRESSURE ZONE) BACKFLOW PREVENTION DEVICE TO EACH FAUCET SUPPLY LINE.

CAUTION: Do not use harsh abrasives or solvents for cleaning this unit.

SAVE THESE INSTRUCTIONS

TABLE OF CONTENTS

Important Installation Measurements 1

Installation and Operation Guidelines 2-3

Electrical Installation Instructions and Specifications 3-4

General Installation Guidelines 5

Optional Equipment Installation Guidelines 6-8

Optional Equipment Operating Instructions 9

Cleaning Instructions. 10

Troubleshooting. 11

Residential Warranty 12-13

Commercial Warranty 14-15

ATTENTION INSTALLER!

Access must be provided to **each** pump or electrical component on your tub. The access panel(s) must have a minimum size of 16" x 14" for installation and future servicing of the equipment.

MTI Baths, Inc. will not authorize any service unless **clear** access is available. Access from a crawlspace or incomplete access to all equipment may result in warranty claims being denied.

IMPORTANT INSTALLATION MEASUREMENTS

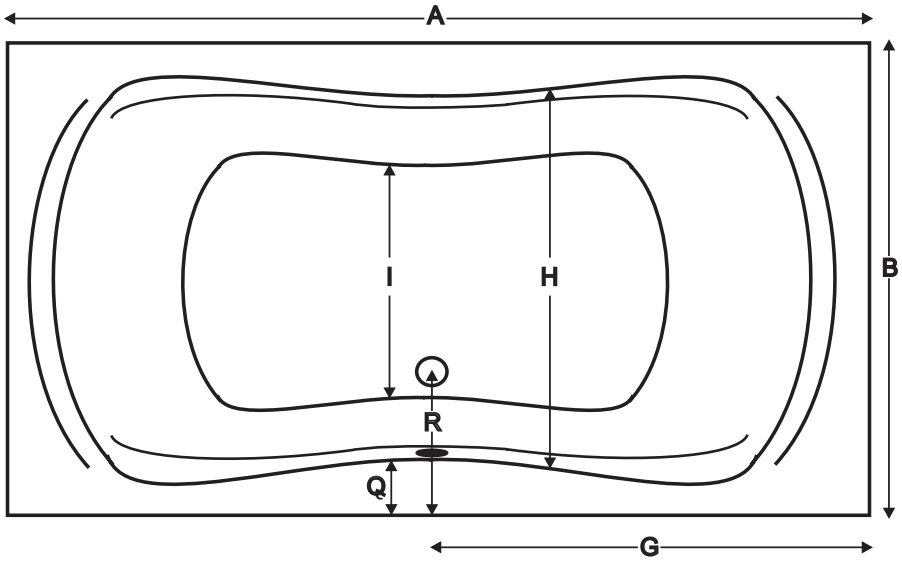

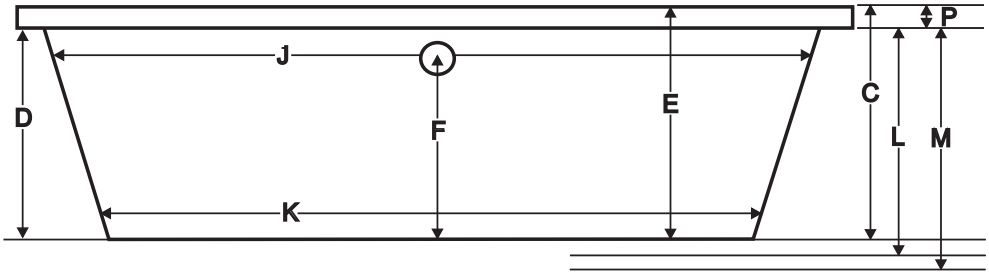

A: Overall length

B: Overall width

C: Overall height

D: Height – flange bottom to tub bottom

E: Inside tub height

F: Center of overflow to tub bottom

G: Drain center to right tub edge

H: Inside bowl width at top of bowl

I: Inside bowl width at bottom of bowl

J: Inside bowl length at top of bowl

K: Inside bowl length at bottom of bowl

L: Allow 1/2" to 1" to D for wet bedding

M: Pre-leveled frame height* – Adds 1/2"- 3" to height

P: Flange edge depth

Q: Top flange width

R: Drain center to edge of flange

*Please measure actual tub **prior** to building any decking or framing. Specifications are subject to change without notice. MTI Baths, Inc. is not responsible for any labor or material charges for preparatory work.

INSTALLATION AND OPERATION GUIDELINES

Read all instructions before installing tub. Installer / product owner is responsible for complying with all state and local codes. Warranty coverage will be void if unit is not tested and installed per the enclosed instructions. MTI strongly recommends using licensed professionals to install this product. **Warning: Certain cleaning products will permanently damage the acrylic surface. Read product label carefully before using any cleaning product. Never use anything abrasive, aerosol sprays or any product that is described as "scrubbing bubbles".**

BEFORE INSTALLING:

Inspect tub thoroughly.

A. Damage from shipping or delivery must be reported to carrier immediately. **Do not install damaged tub. MTI is not responsible for damage occurring in transit.**

B. Factory defect must be reported to factory before tub is installed. Defects or damage claimed after installation will be excluded from warranty.

C. **Important** - Measure tub on site carefully before framing or cutting any deck materials. Specifications are subject to change without notice. MTI Baths is NOT responsible for any preparatory labor or materials.

ATTENTION INSTALLER!

THIS TUB MUST BE TESTED FOR OPERATION AND LEAKS PRIOR TO ENCLOSURE OF SURROUNDING AREAS. FAILURE TO DO SO WILL VOID WARRANTY. THIS TUB WAS WATER TESTED AT THE FACTORY AND FOUND TO BE FULLY OPERATIONAL AND LEAK-FREE PRIOR TO SHIPPING. FREIGHT, HANDLING AND JOB SITE EXPOSURE MAY HAVE DETERIORATED THE TUB'S CONDITION. IT IS THE RESPONSIBILITY OF THE INSTALLER TO THOROUGHLY TEST THE UNIT PRIOR TO INSTALLATION. TUBS ARE INTENDED FOR INDOOR USE ONLY. TUBS ARE WARRANTED FOR INDOOR INSTALLATION IN A CLIMATE CONTROLLED ENVIRONMENT ONLY.

TEST PROCEDURES

1. Place the tub on a flat surface such as the driveway.
2. Seal the drain with tape.
3. Fill tub to overflow and allow tub to stand for five minutes **without the pump running.** Examine all fittings carefully for leaks. **NOTE:** The overflow is a plumbing device designed to prevent water from reaching a certain level in your tub. DO NOT, under any circumstances, tape off or block the overflow in any way. Any controls located above the normal water line are designed to be water-resistant, not water-proof. The controls will not leak under normal usage, however, they are not warranted against leaks when improperly used or subjected to conditions for which they were not designed.
4. Plug in the inline heater and pump, Radiance or LED light control box into a 110v GFCI outlet. Start the equipment and check all fittings for leaks and proper operation.
5. Check that all the features on the tub match exactly what was ordered.
6. **If any leaks or operating problems are discovered, do not complete installation until problems are resolved. MTI will not be responsible for leaks claimed after the tub is installed, nor any costs involved with removing or reinstalling the tub or the costs of any surrounding materials or labor.**

See troubleshooting section of this manual or call for assistance: 800-783-8827

Always protect tub from construction damage by using a protective cover. Damage, including chips and scratches, incurred at the jobsite is excluded from warranty, but may be repaired by qualified technician at the owner's expense. Do not stand in the tub or store materials in the tub during construction. Do not store tub in temperatures below 32 degrees Fahrenheit. Proper waste and overflow installation is the responsibility of the installer. MTI does not warrant leaks associated with improper waste and overflow installation.

There are many possible ways to install your new MTI tub, and some may require different framing than the following instructions. Keep in mind that the framing should always provide a level surface for the rim of the tub and sufficient space below the tub for bedding compound. **Access must be provided to each pump, or electrical component on your tub. The access panels must have a minimum size of 16" x 14" for installation and future servicing of the equipment. MTI will not authorize any service unless clear access is available. The installer is responsible for providing access for any future servicing. The bolts/screws through the mounting feet on the pump may be loosened or removed once the tub is in place if necessary for future servicing.**

Each MTI tub may be ordered with a wide array of options. If your tub has more than two power cords, the power cords will be gathered together with a bright yellow hang tag to indicate the number of power cords to be plugged in for proper operation. See electrical specifications on page 4.

Additional access to plumbing fixtures is strongly recommended. It is the responsibility of the installer to comply with local plumbing codes regarding pump and plumbing access. **Note: Do not allow any material such as insulation within 8" of pump. Pump must have sufficient air space surrounding it for circulation.**

ELECTRICAL INSTALLATION INSTRUCTIONS

Warning - When installing or using electrical products, basic precautions should always be followed, including:

1. Soaking tubs equipped with an in-line heater require dedicated 110V circuits for the electrical components. Please see Electrical Specifications on page 4. If your tub has more than two power cords, the power cords will be gathered together with a hang tag indicating how many items must be plugged in for proper operation. This circuit must be connected to a supply that is protected by a ground fault circuit interrupter (GFCI). Such a GFCI should be provided by the installer and tested on a routine basis. To test the GFCI, push the test button. The GFCI should interrupt power. Push the reset button. Power should be restored. If the GFCI fails to operate in this manner, there is a ground current flowing, indicating the possibility of electric shock. Do not use this unit. Disconnect the unit and have the problem corrected by a qualified service representative before using.
2. MTI pumps and inline heaters are supplied with a 29" grounded plug to be plugged into a grounded recepticle. Do not remove this plug. The control(s) for various options are typically located on the tub, and a wall switch is not necessary. Under no circumstance should you alter the provided supply cord.
3. **A pressure wire connector is supplied on the exteror of the pump to permit connection of a No.8AWG (8.4mm) solid copper bonding conductor* between this unit and all other electrical equipment and exposed metal in the vicinity as needed to comply with local requirements.**

WARNING: Unauthorized modification may cause unsafe operation and poor performance of the whirlpool. Do not relocate the whirlpool pump, or make other modifications to the whirlpool system, as this could adversely affect the performance and safe operation of the whirlpool. MTI shall not be liable under its warranty or otherwise for personal injury or damage caused by any such unauthorized modification.

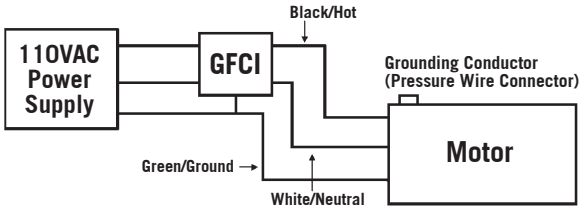

See Manufacturers Wiring Diagram on Motor

IMPORTANT SAFETY INSTRUCTIONS PERTAINING TO A RISK OF FIRE, ELECTRIC SHOCK, OR INJURY TO PERSONS.

WARNING—When using electrical products, basic precautions should always be followed, including these: **(Please read and follow all directions. Save these instructions.)**

1. **DANGER:** To reduce the risk of injury, do not allow children or infirmed persons to use this product unless they are supervised at all times.
2. This MTI hydrotherapy unit is designed for use only as described in this manual. Do not use attachments not recommended by the manufacturer.
3. Do not drop or insert any object into any opening.
4. Do not operate this tub without the guard over the suction fitting (water intake). The guard is a safety device that reduces the potential hazard of hair or body entrapment. Keep hair and body away from suction guard when pump is running.
5. Anyone under doctor's care, pregnant, or whose health is poor should check with a physician before using any whirlpool bath system.
6. Recommended length of hydrotherapy bath is 10 minutes. However, if you become dizzy or nauseated or develop a headache, get out at once and cool down. Get medical attention if symptoms persist. Also check with your physician before using this system again.
7. Do not use immediately after eating or while under the influence of drugs or alcohol.
8. Before servicing unit, shut off all electrical outlets as more than one outlet may be energized.

Electrical Specifications

1500-Watt Pump/Heater combo - for "HTISOAK" option	110 VAC	18 AMP
LED Lighting (Set of Two)	110 VAC	1 AMP
Radiance®	110 VAC	5 AMP
Stream Bath pump	110 VAC	3 AMP

*Subject to change without notice. It is the responsibility of the installer to comply with all State and Local codes.

GENERAL INSTALLATION GUIDELINES

Wait until tub is onsite to building any supporting structures. MTI specifications are ± ½” and subject to change without notice. Take all final installation dimensions from tub. Pre-leveled frame, optional pre-leveled foam base, and air system add up to 3” overall height depending on the tub model.

MTI tubs are not equipped with leveling feet. The tub must be leveled from the top flange in both directions and supported the full length under the tub with proper bedding (or factory-installed foam base) for proper operation. MTI recommends Quikrete #1103 sand/topping mix wet-bedding compound. Plaster or sheet rock mud are NOT sufficient bedding compounds. Failure to properly bed the tub will void any warranty on the tub shell. If your tub has a factory-installed pre-leveled foam base or air system, wet-bedding is not necessary.

Lower tub into bedding compound and shift side-to-side until level. Use care not to damage any plumbing, wiring or other components. Check level. If not level, the tub will not drain properly. Let compound harden overnight before use.

NOTE: If motor is temporarily removed to facilitate installation, ensure mounting feet and motor connections are secure when tub is in place. System and water test prior to final enclosure.

ALCOVE

Mark a level line on the stud walls using the measurement determined above. A 2x2 or similar stringer will be attached to the studs touching this line. All mounting surfaces must be level to allow for proper drainage. Framing of the same height should be constructed across the front of the tub for skirt, tile or other material. Remember to allow for access to each heater, pump and/or electrical component.

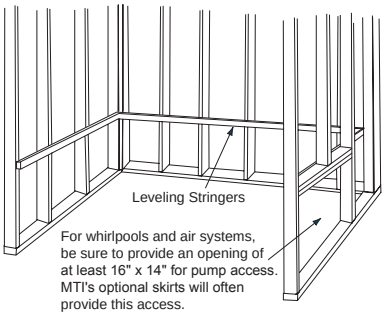

DROP IN

Use the above dimension as the finished deck height from the floor. The drop in opening should be approximately 1-½ inches smaller than the outside dimensions of the tub. This will create a ¾ inch ledge to support the entire rim of the tub. It is best to have as large an opening as possible in the deck to clear the plumbing and other tub accessories. Full size templates for oval or odd shaped tubs are available. The bottom of the tub must be fully supported with bedding compound and must bear the weight of the tub, water and bather. Under no circumstances should the tub “hang” by the top flange.

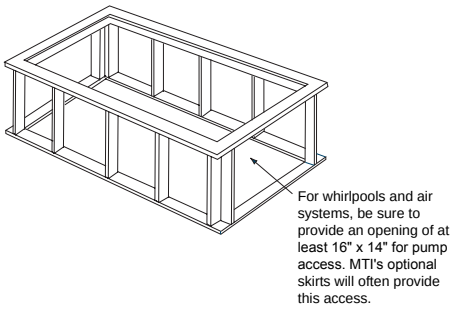

UNDERMOUNT

MTI does not make recommendations as to the size and shape of the opening for undermount installation. Do NOT use any templates supplied by MTI for undermounting. Construct framing for the tub using the measurement determined above. The framing structure is to level the tub. Additional framing must be provided around the tub to support the weight of the decking material.

The rim of the tub is not to bear the weight of the deck material! Have tub at jobsite and measure or template very carefully before cutting any decking materials. MTI is not responsible for any preparatory labor or materials. If your application calls for solid surface material covering only the width of the tub flange, additional support is not necessary.

INTEGRAL SKIRTED (alcove)

Slide tub into installation location. Check to ensure that the tub is level to allow for proper drainage. If the tub is level, proceed to step two.

Prepare wet bed, unless tub is equipped with optional factory-installed foam base and is being installed on a flat and level surface (a small amount of thin-set is recommended to level uneven floor).

Carefully drill 1/8" holes through the tile flange at each stud location. Secure to stud with screws, being careful not to over-tighten as this may cause the acrylic to crack or chip. Do not attempt to drive nails through the integral flange. See illustrations on page 7.

OPTIONAL EQUIPMENT INSTALLATION GUIDELINES

THE OPTIONS BELOW ARE NOT STANDARD ON EVERY BATH. PLEASE CHECK YOUR ORDER FOR ANY ADDITIONAL OPTIONS ADDED.

IN-LINE HEATER - If your tub came equipped with the separate re-circulating inline heater and pump combination, there will be a separate on/off control on the tub to activate the in-line heater. Both the heater and pump must be plugged into a 110 VAC, 20 amp, GFCI protected outlet.

RADIANCE® - Each Radiance system comes with an on/off touch pad, or a designated icon one keypad, and a transformer box equipped with a 27" power cord. There are two heated zones for each Radiance system purchased. To install, simply plug the transformer box into a 110 V, GFCI protected outlet. The transformer box draws 5 amps.

CHROMATHERAPY - Simply plug the control box into a GFCI outlet. The transformer box draws 1 amp.

STREAM BATH - Requires a 110V, 15 Amp GFCI circuit. Simply plug the control box into a GFCI outlet. The pump draws 3 Amps.

TILE FLANGE - FACTORY-INSTALLED

1. Determine mounting height of tub.
2. Make sure tub is properly bedded and level from front to back and side to side.
3. Screw through the flange into studs-no pre-drilling is necessary. The tile flange is not designed to support the weight of the tub!
4. Seal / fill the void between the tile flange and tub with clear silicone.

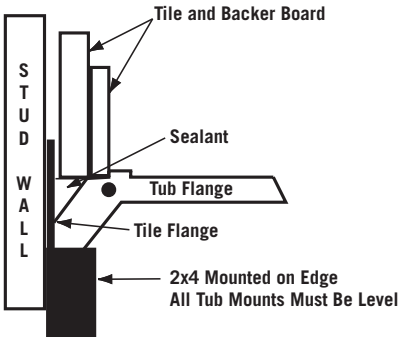

TILE FLANGE KIT – FIELD INSTALLATION

1. Clean tub flange.
2. Apply supplied adhesive to tub flange and tile flange with brush, being careful not to get adhesive on top of tub.
3. Position tub 2-3" from wall.
4. Apply tile flange to tub flange.
5. Position the tub against the walls. Adhesive will set in five minutes.
6. Seal / fill the void between the tile flange and tub with clear silicone.
7. Trim any excess flange.

INTEGRAL TILE FLANGE

Determine mounting height of front flange of tub. If installing with optional skirt, mounting height is the height of the skirt. With front flange at proper height, shim tub until level. **Carefully drill 1/8" holes through the tile flange** at each stud location. Use bedding compound to support tub to correct height. Secure to stud with screws, being careful not to over-tighten as this may cause acrylic to crack or chip. **Do not attempt to drive nails through the integral flange.** See images at right.

PRE-LEVELED FRAME

Place tub into proper location and attach to floor or studs with 2" screws drilled through frame. This system does not require bedding compound unless subfloor is uneven and unit must be shimmed to achieve level. The pre-leveled frame adds approximately 1/2"-3" to the height of the bath.

OPTIONAL EQUIPMENT INSTALLATION GUIDELINES (continued)

VIRTUAL SPOUT

Incoming water is connected to mixing valves mounted on the tub, surrounding deck or wall. Output from the mixing valves must then be tied into either a Wilkins Dual-Check Valve or Atmospheric Vent Valve, depending on local backflow prevention plumbing codes. If code requires an Atmospheric Vent Valve, you can use either a tub mounted or deck mounted Breda Valve or an In-wall Acme Valve. Output from any of these valves is then connected to the Virtual Spout. See specific installation instructions below.

NOTE: An In-wall Acme Atmospheric Vent Valve and Wilkins Dual-Check Valve is packaged with the Virtual Spout and is included in the price. If using a deck mounted Breda instead of an In-wall Valve, the Breda Valve must be purchased separately.

INSTALLATION INSTRUCTIONS FOR TUB-MOUNTED OR DECK-MOUNTED BREDA VALVE (FIGURE 1)

- Before you begin, check and observe local plumbing codes.
- Install mixing valves on tub, surrounding deck or wall.
- Connect the mixed water line from the mixing valves to the bottom center inlet port on the Breda Atmospheric Vent Valve.
- The Breda Valve is pre-plumbed to direct the water flow to the filler port located on the inside wall of the tub.
- MTI recommends providing access to the Breda Valve for any future servicing.
- Check all plumbing for leaks and proper operation.

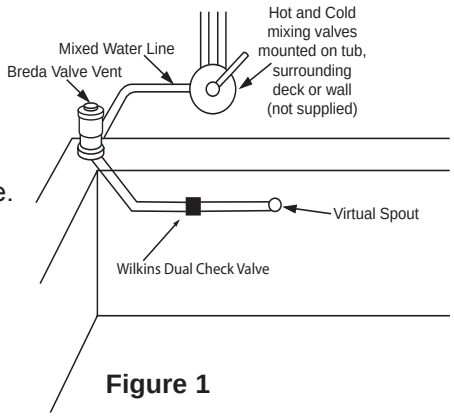

Figure 1

INSTALLATION INSTRUCTIONS FOR ACME IN-WALL ATMOSPHERIC VACUUM BREAKER (FIGURE 2)

- Before you begin, check and observe local plumbing codes.
- Install mixing valves on tub, surrounding deck or wall.
- Connect mixed water line from the mixing valves to the In-Wall Atmospheric Vacuum Breaker.
- Make sure that the bottom of the Atmospheric Vacuum Breaker is a minimum of 6" above the top of the tub.
- Connect the output from the In-Wall Atmospheric Vacuum Breaker to the copper pipe leading to the Virtual Spout.
- Check all plumbing for leaks and proper operation.

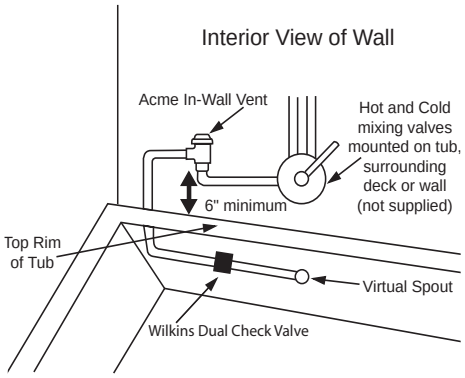

Figure 2

IMPORTANT NOTES FOR ACME IN-WALL UNIT

- The Atmospheric Vacuum Breaker is subject to normal maintenance and therefore must be installed in such a way that it will be accessible after the tub installation is complete.
- Since, under backsiphonage conditions, small amounts of water may be spilled through the air port, the Atmospheric Vacuum Breaker must be located and installed in such as way that the water will be captured and contained.

INSTALLATION INSTRUCTIONS FOR WILKINS DUAL-CHECK VALVE (FIGURE 3)

- Before you begin, check and observe local plumbing codes.
- Install mixing valves on tub, surrounding deck or wall.
- Connect mixed water line from the mixing valves to the Wilkins Dual Check Valve.
- Connect the output from the Wilkins Dual Check Valve to the copper pipe leading to the Virtual Spout.
- Check all plumbing for leads and proper operation.

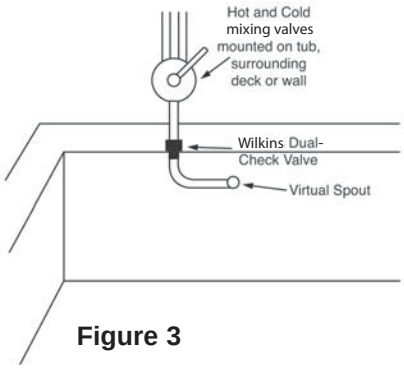

Figure 3

OPTIONAL EQUIPMENT INSTALLATION GUIDELINES (continued)

STEREO H_2O® INSTALLATION SCHEMATICS

Stereo H_2O® offers flexibility of installation. The electronic transducers may be wired to a dedicated amplifier or integrated in a zoned home audio system. The following page shows 2 examples of how Stereo H_2O can be connected.

Stereo H_2O Powered by Dedicated Amplifier in Bathroom

NOTE: Actual location of transducers will vary depending on the model of tub, hydrotherapy package and other options chosen.

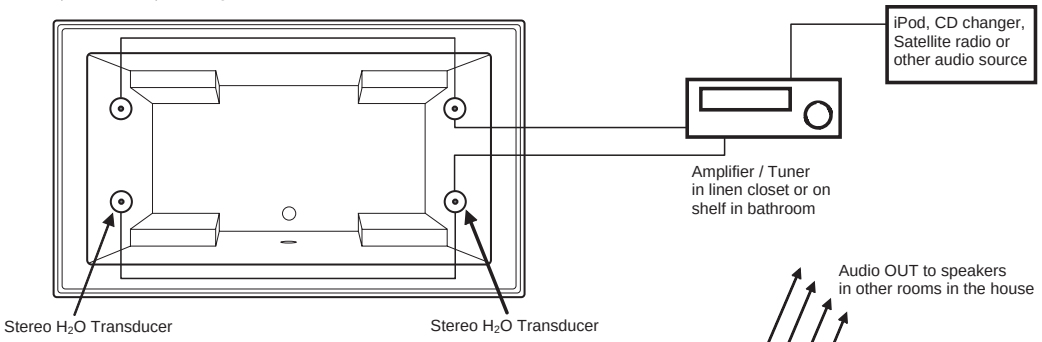

Stereo H_2O Integrated in Zoned Home Audio System

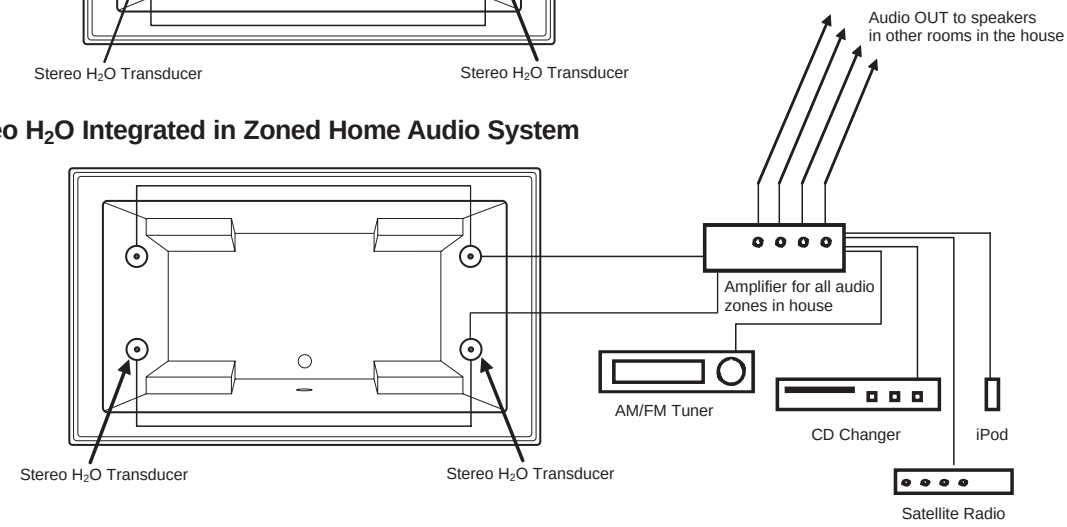

NOTE: The amplifier selected to power the electronic transducers should be rated between 150-250 Watts per channel at 4 ohms, or 75-125 Watts per channel at 8 ohms. Connect Red to "+" on amplifier. Black to "-" on amplifier.

OPTIONAL EQUIPMENT OPERATING INSTRUCTIONS

INLINE HEATER

Depress the on/off button to turn the system on, press again to turn the system off. The system gently recirculates the bath water through the inline heater, with negligible disturbance to the water. The heatsoak system requires a dedicated 110 VAC, 20 AMP, GFCI protected outlet. **Both** the pump and inline heater must be plugged in for system to operate properly.

RADIANCE

To turn the system on, press the button on the touchpad. The light on the touchpad will be on. Radiance is designed to be left on continually as the initial heating can take about an hour. The system uses less energy than a standard light bulb. To turn the system off, press the button again. The system will turn off in the event of a power surge or power failure. Must have access to transformer box for future servicing - test prior to installing.

Rectangular touchpad
for rectangular, square & corner tubs

Round touchpad
for round & oval tubs

OPTIONAL EQUIPMENT OPERATING INSTRUCTIONS (continued)

CHROMATHRAPY - KEYPAD FUNCTIONS

ON/OFF BUTTON:

1st Press: White light. LED light on (White is only available when the system is initially turned on).

2nd Press: Light off. LED light off.

Press the on/off button - Light must be on for any mode to function.

MODE BUTTON FUNCTIONS:

1st Press: Aqua-Blue-Green Cycle. - First cycle 1.5 seconds between color changes; then slows to 6 seconds between color changes.

2nd Press: Rainbow Cycle - Colors change from Aqua-Blue-Magenta-Red-Orange-Yellow-Green. First cycle 1.5 seconds between color changes; then slows to 6 seconds between color changes.

3rd Press: Pressing the Mode button a third time will stop the system on the color displayed.To change the color, use the up & down buttons to go through each color change in small increments. (Alternatively, you could turn the light off and start over.)

UP ARROW FUNCTIONS:

To Change the Light Color - Pressing the up arrow will allow the lights to change through the basic colors: Aqua, Blue, Magenta, Red, Orange, Yellow and Green.

When in the Rainbow Cycle - Press & hold to increase the cycle speed. Release pressure at the desired speed.

When in the Aqua-Blue-Green Cycle - Press & hold to increase the cycle speed. Release pressure at the desired speed.

DOWN ARROW FUNCTIONS:

To Change the Light Color - Pressing the up arrow will allow the lights to change through the basic colors: Aqua, Blue, Magenta, Red, Orange, Yellow and Green.

When in the Rainbow Cycle - Press & hold to decrease the cycle speed. Release pressure at the desired speed.

When in the Aqua-Blue-Green Cycle - Press & hold to decrease the cycle speed. Release pressure at the desired speed.

STREAM BATH

Prior to installation, this bath must be water tested in accordance with the procedures outlined on page 2. The tub will then be installed following the instructions starting on page 3.

To operate the unit, fill the tub to approximately 2” above the highest vent. Activate the on/off control on the keypad. The flow, and force, of the stream of water may be adjusted by turning the vents. Pointing them upward will result in a more vigorous “babbling brook” action, while pointing them downward will slow the action of the Streambath.

STREAM BATH - KEYPAD FUNCTIONS

FUNCTIONS

PUMP ON

1st Press: The pump starts. Use the air volume control to adjust.

PUMP OFF

1st Press: The pump stops.

CLEANING INSTRUCTIONS FOR THE ACRYLIC SHELL

The cross-linked cast acrylic surface of all MTI acrylic products is among the glossiest, highest quality surfaces available. Its hard, non-porous surface prevents dirt from accumulating and resists stains better than other materials. With normal use, cast acrylic will retain its beauty with only a minimal amount of care. To maintain the high gloss, elegant look of the cast acrylic surface, follow these simple steps:

Use common household, **non-abrasive** cleaners for most cleaning jobs (for example: a mild dishwashing detergent such as Ivory Liquid). Follow manufacturer's directions and precautions. **Do not use unless the product label specifically states that it is safe for acrylic.** Rinse well and dry with a soft, clean cloth. Be sure to check the product label. Some products, although not containing abrasives, WILL damage the acrylic over time.

Never use any type of "scrubbing bubbles" or aerosol spray cleaners on your acrylic product unless it specifically states that it is safe for use on acrylic!

Never use abrasive cleansers. If any product feels gritty when rubbed between your fingers, do not use on the acrylic surface or controls as permanent damage will occur.

Do not allow your cast acrylic surface to come into contact with nail polish, nail polish remover, Wintergreen oil, dry cleaning solution, lacquer thinners, gasoline, pine oil, etc.

Remove dust and dry dirt with a soft, damp cloth.

Clean grease, oil, paint or ink stains with isopropyl (rubbing) alcohol. Dry with a clean, soft cloth.

Avoid using razor blades or other sharp objects that might scratch the surface. Small scratches can be removed by applying a thin coat of automotive polishing liquid and buffing lightly with a clean cloth. For deeper scratches, sand the surface lightly with a 400 grit "wet or dry" paper and buff with a fine grit buffing compound.

MTI strongly recommends a professional acrylic repair person for deep scratches or chips.

CLEANING INSTRUCTIONS FOR INLINE HEATER / PUMP

Fill tub with warm water 2" above highest intake. Add 1/4 cup of MTI's Fresh Wave Cleaning Solution, 1 cup vinegar OR several drops of low sudsing detergent. Activate inline heater for 3 minutes, turn system off, then simply drain tub.

TROUBLESHOOTING

Q: How do I find the serial or registration number for my tub?

A: The serial number can be found on the warranty card included with the installation manual for your tub. When tub is equipped with an inline heater, the sticker is typically placed 3-4 inches over the inline heater/pump. If tub does not have an inline heater, the sticker will be placed on the drain side of the tub near the overflow. Please write your serial number on the front of this book for future service needs.

Q: The inline heater/pump combo will not turn on. What should I check first?

A: Check that the red air tube is securely connected to the on/off button and the pump. Test the outlet for power by plugging in a small lamp or hair dryer. Check to make sure the breaker is not tripped. Replace GFCI outlet or breaker if necessary. The inline heater and pump have separate power cords; ensure that both are plugged in to a working GFCI receptacle. The indicator light on the top of the heater will glow, indicating it is functioning properly. Keep in mind, the inline heater will not heat your water; it will just maintain the water temperature up to 102 degrees.

Q: How long does it take for the Radiance feature to reach maximum temperature?

A: The Radiance feature will reach maximum operating temperature in approximately 1 hour. If preferred, Radiance may be left on continuously.

Q: The LED lights are not turning on. What should I check first?

A: Make sure the power cord is plugged into a working receptacle. Check that the connection from the keypad to the control box is secure at both ends. Please note that there will be an unused, female power cord exiting the control box adjacent to the male power cord that is plugged in to your receptacle.

Q: There is a rust colored, greasy ring in my bath tub. What causes this?

A: The condition results from sediment in the water heater of the home. Drain and flush the heater according to the manufacturer's instructions, and then clean the interior of the tub with mild, grease-cutting dish soap.

Q: What is recommended to clean the acrylic surface?

A: Any mild dish soap will clean the surface. Never use any aerosol sprays, "scrubbing bubbles" or abrasive cleaners, as they can cause permanent damage.

Q: How can I get scratches out of my acrylic tub?

A: Most scratches can be buffed out using an automotive polish. Any polish suitable for use on "clear coated" automobile paint is fine. Deeper scratches and chips may require the services of a professional acrylic repair technician.

MTI LIFETIME LIMITED RESIDENTIAL WARRANTY

MTI WHIRLPOOL, AIR TUB AND SOAKING TUB RESIDENTIAL WARRANTY

This warranty is effective for all MTI acrylic whirlpools, air tubs, soaking tubs, and spas manufactured after January 1, 2006, and is in lieu of all other warranties. MTI Baths (MTI) provides a limited warranty on its products for use in the continental United States of America* to original purchasers for personal or single family use. Warranty coverage begins on date of purchase (regardless of installation date). Tubs are warranted only when installed in an indoor climate-controlled environment according to the instructions contained in our manual. Previously used display or floor models do not carry any warranty coverage.

Whirlpool, Soaking, Stream Bath & Air Tub Warranty: MTI warrants our MTI Solutions whirlpool and soaking tub products for life. The non pro-rated warranty covers the tub shell and most standard factory-installed components, including pump, motor and standard plumbing against defects in material or workmanship. All other components, even those included in MTI packages are subject to the MTI Two-Year parts warranty described below. Components covered for parts only include, but are not limited to, on/off controls, transformer boxes, neck jet pillows, low water sensors, solenoid valves & LED lights. MTI warrants all MTI Solutions air tubs with Air Massage thermo-air massage system for life. The warranty covers the tub shell and blower. All controls and mechanisms are subject to the MTI Two-Year Parts only warranty described below. **The bath must be water tested for operation and leaks prior to final enclosure of the unit. Failure to do so will void warranty.** If a problem is discovered after the final enclosure, MTI will not be responsible for the cost of removing or reinstalling the tub, or for costs associated with any adjacent materials. Proper drain installation is the responsibility of the installer. MTI's warranty does not cover drain leakage.

Two-Year (Parts Only) Warranty: MTI warrants all other components not specified above for **two** years for **parts only** against defects in material or workmanship. Components covered for parts only include, but are not limited to, on/off controls, transformer boxes, neck jet pillows, low water sensors, solenoid valves & LED lights. Replacement parts shall assume the remaining warranty period of the parts replaced. Replacement parts are subject to availability, and may differ from those originally supplied. MTI cannot guarantee that parts currently in use will be available in the future. Changes in materials, parts or specifications are not valid reasons for product refusal or replacement under warranty claims. Grab bars and additional/ special order trims are specifically excluded from this warranty. Valves and accessories installed and sold by MTI carry their own warranty from their original manufacturer. MTI does not warrant valves and accessories. Check with MTI for details.

Radiance® Warranty: MTI warrants Radiance for two-years, parts only, against manufacturing defects. If the control box or keypad fails within the two year period, MTI will send replacement parts out at no charge. In the unlikely event that the electrical heating grid fails within the two-year period, MTI Baths' only obligation is to refund the purchase price of the Radiance system to the original product owner. Proof of purchase required.

Stereo H_2O® Warranty: MTI warrants the transducer(s) for one-year against manufacturing defects to the original product owner. Labor or any costs associated with gaining access for repair are specifically excluded from warranty. Proof of purchase required.

Return of Warranty Card: The warranty registration card must be filled out by the purchaser and mailed to MTI Baths within one hundred twenty days from purchase in order for this warranty to take effect. Warranty registration can also be done online at mtibaths.com/support/online-warranty.

Warranty Limitations:

The warranty is void if unit is not water tested for operation and leaks and inspected prior to final enclosure. The MTI warranty does not cover defects, damage, or failure caused by common carrier, installer, user, or other person.

Chips, cracks, and scratches are damages, and are NOT covered under warranty, however, they may be repaired by a qualified technician at the owner's/user's expense. Damages or defects that should

Continued on next page

be detected before installation are not covered.

MTI Baths is NOT liable for incidental or consequential damage, loss of time, inconvenience, incidental expenses or material charges or any other costs related to the application of this warranty.

MTI does not cover the following: careless handling; modification of any type for any reason; improper installation (See Installation Instructions); connections supplied by the installer; improper voltage supply/ electrical modifications; misuse; incorrect or improper maintenance; incorrect or inadequate water use; use of improper cleaners; or extraordinary acts such as earthquakes, hurricanes, lightning, floods, hail, etc.

Extent of Warranty: This warranty extends only to the original consumer/purchaser of the MTI Baths product when purchased and originally installed within the boundaries of the continental USA*. The warranty terminates after transfer of ownership or if tub is installed or relocated outside the boundaries of the continental USA* by the original consumer/purchaser prior to the expiration of the warranty period. Display floor models and overstock sale units are excluded from this warranty. See commercial warranty for products used in commercial, rental or multi-family applications.

Warranty Performance: In the event of any malfunction or defect covered under the terms of this warranty, a Factory Authorized Service Agent of MTI Baths will repair the MTI product. To obtain service, contact the MTI Service Department for an agent in your area and issuance of a service order number. **No work/payment will be made without an authorized service order number.** There will be no charge for parts, labor or freight costs for parts necessary to repair the tub under warranty. Written notice of any malfunction or defect must be given within ten days of the time the malfunctions were discovered, and **must be accompanied by the tub serial number, model number and manufacturer's date to verify purchase date.** Notice must be given to: MTI Baths, 670 N. Price Rd., Sugar Hill, GA 30518, Attn: Service Dept. MTI reserves the right to inspect the malfunction or defect on site and determine appropriate course of action.

Acts Invalidating Warranty: Inspecting the unit prior to installation is the responsibility of the installer(s) or person(s) acting on behalf of the user. He/she is responsible for ensuring that the unit is free of defect or damage. The shipping container advises the installer of this responsibility. MTI is not responsible for failure or damage that should have been discovered, repaired, and avoided by proper inspection and testing prior to installation. Damage that occurred in transit is the responsibility of the carrier. The consignee must open and inspect the unit for damage when it is delivered. If the unit is damaged, this must be reported immediately to both the seller and the carrier in writing and an inspection must be requested. In the event that the carrier fails to respond, report such response to both the seller and the carrier. Any freight claims must be filed within ten business days. It is the responsibility of the installer, contractor, or user to install/bed the unit properly allowing for access for service. Access must be provided to **each** pump and/or electrical component on the tub. The access panel(s) must have a minimum size of 16"x14" for installation and future servicing of the equipment. MTI Baths, Inc. will not authorize any service unless **clear** access is available. Access from a crawlspace or incomplete access to all equipment may result in warranty claims being denied. **Unit must be water tested for operation and leaks prior to final enclosure. Damage, including chips or scratches, occurring to the unit during installation is the responsibility of the installer and after installation is the responsibility of the user.**

Disclaimers: MTI Baths is not responsible for incidental or consequential damages/losses from any cause such as water damage to carpeting, floors, or ceilings. Optional equipment not manufactured by MTI or installed by MTI is not covered. Damages or defects that should be detected before installation are not covered. This limited warranty does not include labor, transportation, or other costs incurred in the removal and/or reinstallation of the original unit or replacement unit. Costs related to obtaining access for repair are not covered. The foregoing warranty is EXCLUSIVE and in lieu of all other warranties, including any other warranty of quality, express or implied, and including any warranty of merchantability, or any warranty of fitness for any particular purpose.

Customer Service: To verify coverage or request service, please contact the MTI service department at 800-783-8827. Please have serial or registration number available.

*** Exceptions for Alaskan and Canadian Customers:** MTI Baths extends the complete Residential Limited Lifetime Warranty to any applicable product installed within a 75-mile radius of an Authorized MTI Distributor. Any installation site outside the 75-mile radius will be covered for two years, parts only.

*** Exceptions for Hawaiian Customers:** MTI Baths extends the complete Residential Limited Lifetime Warranty to Hawaiian customers on the islands of Maui, Kauai and Oahu only. All other locations will be covered for two years, parts only.

M T I C O M M E R C I A L W A R R A N T Y

MTI WHIRLPOOL, AIR TUB AND SOAKING TUB COMMERCIAL WARRANTY

This warranty is effective for all MTI acrylic whirlpools, air tubs, soaking tubs, and spas manufactured after February 1, 2006, and is in lieu of all other warranties. Warranty coverage begins on date of purchase (regardless of installation date). MTI Baths, Inc. provides a limited warranty to the original purchaser for commercial, rental or multi-family applications. Tubs are warranted only when installed in a climate-controlled environment according to the instructions contained in our manual. Previously used display or floor models do not carry any warranty coverage.

Whirlpool, Soaking, Stream Bath & Air Tub Warranty: MTI warrants our MTI Solutions whirlpool and soaking tub products for 2 years. The non pro-rated warranty covers the tub shell and most standard factory-installed components, including pump, motor and standard plumbing against defects in material or workmanship. All other components, even those included in MTI packages are subject to the MTI One-Year parts warranty described below. Components covered for parts only include, but are not limited to, on/off controls, transformer boxes, neck jet pillows, low water sensors, solenoid valves & LED lights. MTI warrants all MTI Solutions air tubs with Air Massage thermo-air massage system for 2 years. The warranty covers the tub shell and blower. All controls and mechanisms are subject to the MTI One-Year Parts only warranty described below. **The bath must be water tested for operation and leaks prior to final enclosure of the unit. Failure to do so will void warranty.** If a problem is discovered after the final enclosure, MTI will not be responsible for the cost of removing or reinstalling the tub, or for costs associated with any adjacent materials. Proper drain installation is the responsibility of the installer. MTI's warranty does not cover drain leakage
One-Year (Parts Only) Warranty: MTI warrants options, accessories and all other components not specifically listed above for **one** year for **parts only** against defects of material or workmanship. Components covered for parts only include, but are not limited to: on/off controls, transformer boxes, neck jet pillows, low water sensors, solenoid valves & LED lights. Replacement parts shall assume the remaining warranty period of the parts replaced. Replacement parts are subject to availability, and may differ from those originally supplied. MTI can not guarantee that parts currently in use will be available in the future. Changes in materials, parts or specifications are not valid reasons for product refusal or replacement under warranty claims. Grab bars and additional/ special order trims are specifically excluded from this warranty. Valves and accessories installed and sold by MTI carry their own warranty from their original manufacturer. MTI does not warrant valves and accessories. Check with MTI for details.

Radiance® Warranty: MTI warrants Radiance for two years, parts only, against manufacturing defects. If the control box or keypad fails within the two-year period, MTI will send replacement parts out at no charge. In the unlikely event that the electrical heating grid fails within the two-year period, MTI Baths' only obligation is to refund the purchase price of the Radiance system to the original product owner. Proof of purchase required.

Stereo H_2O® Warranty: MTI warrants the transducer(s) for one year against manufacturing defects to the original product owner. Labor or any costs associated with gaining access for repair are specifically excluded from warranty. Proof of purchase required.

Return of Warranty Card: The warranty registration card must be filled out by the purchaser within one hundred twenty days from purchase and mailed to MTI Baths in order for this warranty to take effect. Warranty registration can also be done online at mtibaths.com/contact-us/.

Warranty Limitations:

The warranty is void if unit is not water tested for operation and leaks and inspected prior to final enclosure. The MTI warranty does not cover defects, damage, or failure caused by common carrier, installer, user, or other person.

Chips, cracks, and scratches are damages, and are NOT covered under warranty, however, they may be repaired by a qualified technician at the owner's/user's expense. Damages or defects that should be detected before installation are not covered.

MTI Baths is NOT liable for incidental or consequential damage, loss of time, inconvenience, incidental expenses or material charges or any other costs related to the application of this warranty.

Continued on next page

MTI does not cover the following: careless handling; modification of any type for any reason; improper installation (See Installation Instructions); connections supplied by the installer; improper voltage supply/electrical modifications; misuse; incorrect or improper maintenance; incorrect or inadequate water use; use of improper cleaners; or extraordinary acts such as earthquakes, hurricanes, lightning, floods, hail, etc.

Extent of Warranty: This warranty extends only to the original consumer/purchaser of the MTI Baths product when purchased and originally installed within the boundaries of the continental USA (unless otherwise noted). The warranty terminates after transfer of ownership or if tub is installed or relocated outside the boundaries of the continental USA by the original consumer/purchaser prior to the expiration of the warranty period.

Warranty Performance: In the event of any malfunction or defect covered under the terms of this warranty, a Factory Authorized Service Agent of MTI Baths will repair the MTI product. To obtain service, contact the MTI Service Department for an agent in your area and issuance of a service order number. **No work/payment will be made without an authorized service order number.** There will be no charge for parts, labor or freight costs for parts necessary to repair the tub under warranty. Written notice of any malfunction or defect must be given within ten days of the time the malfunctions were discovered, and **must be accompanied by the tub serial number, model number and manufacturer's date to verify purchase date.** Notice must be given to: MTI Baths, 670 N. Price Rd., Sugar Hill, GA 30518, Attn: Service Dept. MTI reserves the right to inspect the malfunction or defect on site and determine appropriate course of action.

Acts Invalidating Warranty: Inspecting the unit prior to installation is the responsibility of the installer(s) or person(s) acting on behalf of the user. He/she is responsible for ensuring that the unit is free of defect or damage. Our shipping container advises the installer of this responsibility. MTI is not responsible for failure or damage that should have been discovered, repaired, and avoided by proper inspection and testing prior to installation. Damage that occurred in transit is the responsibility of the carrier. The consignee must open and inspect the unit for damage when it is delivered. If the unit is damaged, this must be reported immediately to both the seller and the carrier in writing and an inspection must be requested. In the event that the carrier fails to respond, report such response to both the seller and the carrier. Any freight claims must be filed within ten business days. It is the responsibility of the installer, contractor, or user to install/bed the unit properly allowing for access for service. Access must be provided to **each** pump, air blower and/or electrical component on your tub. The access panel(s) must have a minimum size of 16"x14" for installation and future servicing of the equipment. MTI Baths, Inc. will not authorize any service unless **clear** access is available. Access from a crawlspace or incomplete access to all equipment may result in warranty claims being denied. **Unit must be water tested for operation and leaks prior to final enclosure. Damage, including chips or scratches, occurring to the unit during installation is the responsibility of the installer and after installation is the responsibility of the user.**

Disclaimers: MTI Baths is not responsible for incidental or consequential damages/losses from any cause such as water damage to carpeting, floors, or ceilings. Optional equipment not manufactured by MTI or installed by MTI is not covered. Damages or defects that should be detected before installation are not covered. This limited warranty does not include labor, transportation, or other costs incurred in the removal and/or reinstallation of the original unit or replacement unit. Costs related to obtaining access for repair are not covered. The foregoing warranty is EXCLUSIVE and in lieu of all other warranties, including any other warranty of quality, express or implied, and including any warranty of merchantability, or any warranty of fitness for any particular purpose.

Customer Service: To verify coverage or request service, please contact the MTI service department at 800-783-8827. Please have serial or registration number available.

Manufactured by: MTI Baths, Inc.
mtibaths.com
670 N. Price Road
Sugar Hill, GA 30518
800 783 8827
770 271 8228
Fax 800 438 8827

© Copyright 2024 by MTI Baths, Inc.
Modification Rights Reserved.

Part # DSTUBSOAK rev. 1115