# Installation and Operation Manual

Effective November 19 2024

# MTI Solutions Collection

**Shower System — Acrylic CXL®**
**DoloMatte®**

**Installer:** This booklet must be given to the product owner. Please note important information below:

Distributor Name _____

Model # _____

Manufacturer's Date _____

Serial / Registration # _____

# Owner's Manual
# &
# Installation Guide

Thank you for purchasing an MTI bath product. You have chosen the best-built shower tray in the USA.

The instructions in this booklet will provide you with the information needed to install and maintain this unit. The ease of cleaning and the elegant look will provide you with many years of pleasure. This information is also available on **mtibaths.com**.

Our customer service department is available to answer any additional questions you may have pertaining to installation and care of your MTI product. Please call **800-783-8827** to speak to our Service Department or email **service@mtibaths.com**.

For faster service, please have your warranty registration number (serial number) ready when calling. The serial number can be found on the front of this manual.

# Table of Contents

Important Safety Instructions ..... 4

Installation Instructions ..... 5–8

Shower Tray ..... 6–7

Radiance ..... 8

Teak Shower Tray ..... 9

Care and Cleaning Instructions ..... 10–11

Residential Warranty ..... 12–13

Commercial Warranty ..... 14–15

# Important Safety Instructions

This manual contains information and instructions for proper handling, operation and maintenance of your MTI shower system. Failure to follow these instructions could result in personal injury, electrical shock or fire.

**WARNING: WHEN USING ELECTRICAL PRODUCTS, BASIC PRECAUTIONS SHOULD BE FOLLOWED INCLUDING THE FOLLOWING**

Do not permit children to use this unit unless they are closely supervised by an adult at all times. Supervision is also required when product are used by an elderly or handicapped individual.

Never leave a running shower unattended.

Use this unit only for its intended use as described in this manual. Do not use attachments not recommended by the manufacturer.

**WARNING**

If the GFCI fails to operate in this manner, there is a ground current flowing, indicating the possibility of electric shock. Do not use this unit. Disconnect the unit and have the problem corrected by a qualified service representative before using.

**DANGER**

Before servicing unit, shut off all electrical outlets as more than one outlet may be energized.

Never operate electrically connected devices in or within 5' of the shower.

To reduce the risk of injury, enter and exit the shower slowly.

To avoid the possibility of personal injury and discoloration of the surface, the inlet water temperature should not exceed 60˚ C (140˚ F).

**Installer/Owner bears all responsibility to comply with all state and local codes when installing this product.**

**SAVE THESE INSTRUCTIONS**

# Installation Instructions – General

Read all instructions before installing the shower tray or any portion of the shower system. MTI recommends using a professional installer for this product. Installer/product owner is responsible for complying with all state and local codes.

**WARNING:** Certain cleaning products will permanently damage the surface. Read product label carefully before using any cleaning product. Never use anything abrasive, aerosol sprays or any product that is described as "scrubbing bubbles." Please see 'Care & Cleaning Instructions' on pg. 9.

### BEFORE INSTALLING

- Inspect product(s) thoroughly.
- Damage from shipping or delivery must be reported to carrier immediately. **Do not install damage unit(s). MTI is not responsible for damage that occurs during transit.**
- Factory defect must be reported to factory before unit is installed. Defects or damage claimed after installation will be excluded from warranty.
- Measure shower tray on site carefully to ensure proper fit into planned opening. Bottom of the shower tray may be slightly larger than the top per product specification sheet. Specifications are subject to change without notice. MTI is not responsible for any preparatory labor or materials.
- **Always protect product(s) from construction damage by using a protective cover.** Damage, including chips and scratches incurred at the jobsite are excluded from warranty, but may be repaired by a qualified technician at the owner's expense. Do not stand in the shower tray prior to installation or store materials in the unit during construction. Shower trays and other shower system products are intended for indoor use and warrantied for indoor installation in a climate controlled environment only.
- Do not store product in temperatures below 32° Fahrenheit.

**Never leave a running shower unattended.**

### WARRANTY CARDS

**IMPORTANT:** Locate and note your serial number on the cover of this manual for any future service needs.

# Installation Instructions – Shower Trays

MTI shower trays are not equipped with leveling feet and are constructed to install on a flat, level sub-floor in accordance with manufacturer installation instructions. The tray must be level on a flat and level surface. Do not begin building any structure for your tray until your tray arrives. All printed specifications for MTI shower trays have ±½″ tolerance AND ARE SUBJECT TO CHANGE AT ANY TIME. Take all final installation dimensions from your shower tray(s).

## GENERAL SHOWER TRAY INSTALLATION INSTRUCTIONS

MTI offers several types of shower trays. General shower tray installation instructions provided below. **See pages 6–8 for important product specific installation details.** MTI recommends a professional contractor to determine the best way to achieve the finished product and function desired.

**1.** Dry fit shower tray into framed opening. Center base within the opening, aligning drain opening with plumbing. Shim base as needed for best contact to the frame.
**2.** Mark flange of shower tray where it aligns with wall studs. Pre-drill a minimum of three ⅛" holes on each side of the flange on the shower tray to align with selected wall studs. Multi-threshold trays will be slightly wider at the base. See pg. 7 for additional installation instructions for ABS tile flange.
**3.** Install drain kit onto the shower tray.[1] Do not use plumber's putty, MTI recommends clear silicone where the drain makes contact with the surface.
**4.** Place enough bedding compound to fill the void between the entire bottom of the shower tray and floor, boxing out an area around the waste pipe for drain installation.

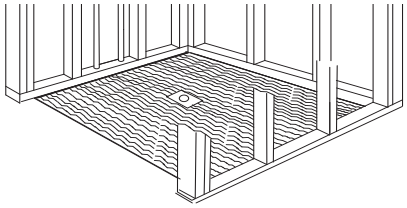

**MTI recommends Quickrete Sand Mix #1103 or equivalent.** Sheetrock mud, plaster, wall board, spray foam and other compounds that are not equivalent to the sand topping mix recommended are not acceptable bedding compounds and use of those products will void the product warranty.

Optional Factory Installed Pre-leveled Foam Base.

**Optional factory installed pre-leveled foam base allows for ready installation on a flat and level subfloor without wet bedding.** Use floor leveling compound and thin-set to ensure subfloor is flat and level before installing shower tray. **Note:** use ¼" notched trowel to evenly spread thin-set before setting shower tray.
**5.** Work shower tray into bedding compound and check for level, front to back and side to side, before securing tile flange to stud walls. **Note**: Some shower trays may appear to have a very slight bend or bow. Apply weight as needed around perimeter of larger trays to level.

**6.** Secure shower tray to stud walls, starting with a front corner, then working around the entire tray. Tray will flatten out as you make your way around, securing it to the wall studs.

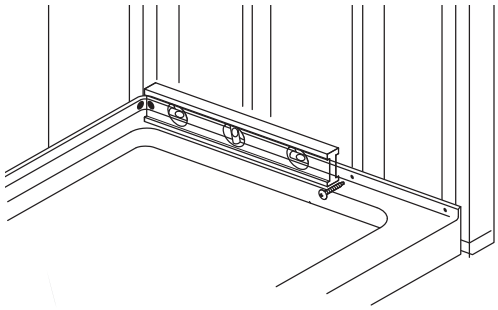

**IMPORTANT:** Do not attempt to drive nails through the tile flange.

**Follow product-specific tile flange installation instructions on pg. 7**

**Important: always allow bedding compound to dry for 24 hours before using shower system.**

[1]MTI does not warrant leaks associated with improper drain installation and will not be responsible for any costs related to improper installation. If you need assistance, please call the MTI Service Department at 800.783.8827.



Rev: 11 20 2024

# Installation Instructions – Shower Trays

Single Threshold with
Integral Tile Flange

## INTEGRAL TILE FLANGE (MOLDED) FOR SINGLE AND DUAL THRESHOLD TRAYS

The integral tile flange is molded into the shower tray at the factory.

- Check shower tray for level before securing tile flange to stud walls.
- Screw flange to the wall studs. See Step 5 on pg. 6. **Do not use nails.**
- Do not over-tighten, as this may cause the material to crack or chip.
- Apply ½" bead of 100% silicone along the top of the integral flange.
- Install backer board. See diagram (right).
- Install finished material in front of backer board.
- Caulk / grout between finished wall material and shower tray.

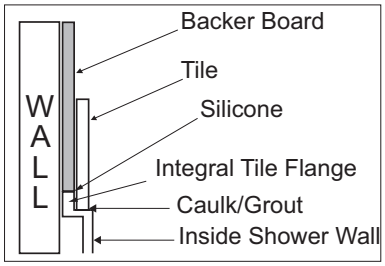


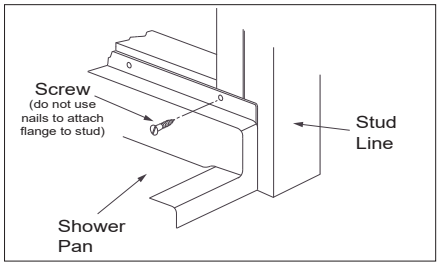

Factory Installed
Tile Flange

## FACTORY INSTALLED TILE FLANGE FOR LOW-PROFILE MULTITHRESHOLD

Rigid ABS tile flange is chemically bonded to 1, 2, or 3 sides of the shower tray as specified on order. Provides watertight seal. Never attempt to remove tile flange — damage will occur.

- Check shower tray for level before securing tile flange to stud walls.
- Screw flexible ABS tile flange to stud wall. **Do not use nails.**
- Apply 100% silicone where the ABS flange meets the shower tray.
- Install backer board. See diagram (right).
- Finished material installs in front of backer board.
- Caulk /grout between finished wall material and shower tray.

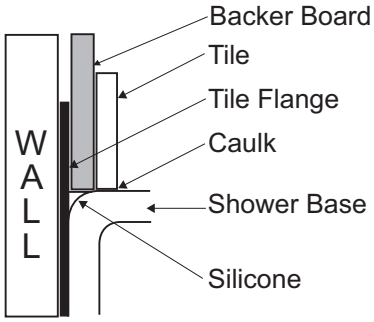


Screw flange to wall stud.

Apply 100% silicone.

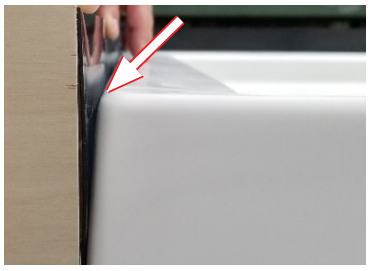

Flange may pull away from the curb of the base as it is secured to the wall, but will remain chemically bonded to the base for watertight seal (See images left)

Apply 100% silicone where the ABS flange meets the shower tray.

# Installation Instructions – Radiance®

Each Radiance® system comes with a dedicated on/off touch pad and a transformer box equipped with a 3' power cord and a single lead with splitter to connect 2 heating grid wires per system that are factory installed on the shower base. The transformer box may need to be remote located. Wires are factory-installed in the direction specified on order for planned location of transformer box. A splitter cable is provided to easily connect both pads to a single lead extending from the transformer box.

**Do not attempt to disconnect the wires extending from the tray.**

See Important Safety Information on page 4 of this manual and Electrical Specifications below. Maximum 15 amp dedicated circuit required for Radiance option. Must be connected to a supply that is protected by a ground fault circuit interrupter (GFCI). System components supplied with MTI tubs intended for installation within the U.S. & Canada are limited to 110V. Check your order details when installing outside of these territories.

Components may be safely remote located while maintaining optimal performance and easy operation when the following conditions are met.

- Installation location of these components must be properly ventilated to keep components from overheating and climate controlled to protect against humidity that can be corrosive to electronics.
- Before fishing cables and completing installation, always test the cables with the system components.
- Select the location for the transformer box within 6" of tray and 3' of a proper electrical supply. Connect the two heating grid wires installed on the tray to the splitter on the transformer box.
- Select the location for the on/off device, if it was shipped loose for remote installation. Connect the keypad to the transformer box.
- Do not crush or kink any of the connections.

**WARNING Always store electrical equipment in a dry place away from bather!**

**!!! ATTENTION INSTALLER !!!**

- A keypad (on/off device) installed remote of the base must always be connected with one continuous cable. Never use a spliced or coupled data cable.
- Longer splitters and other cable extensions are available upon request.
- Do not alter or remove the power supply cord.
- If a wall mount switch is desired to control use of the unity, the switch should control the receptacle.

**MTI is not responsible for system failures due to the use of parts that are not supplied by MTI Baths**

**The following MUST be accessible:**

- GFCI provided by installer
- Radiance transformer box

**MTI is not responsible for provision of access to equipment for service or repair**

| ELECTRICAL COMPONENTS & SPECIFICATIONS<br>Required Electrical Service | | |
|---|---|---|
| 110 Volt | GFCI 1-15 amp | 5 amps |

Electrical requirements may change with additional therapy components. See Product Specification Sheet and Installation Manual for details.

Standard placement of the transformer box wire leads are based on drain location. The outer edge of the shower base will be notched at the factory to accommodate connection of heating grids to the transformer box.

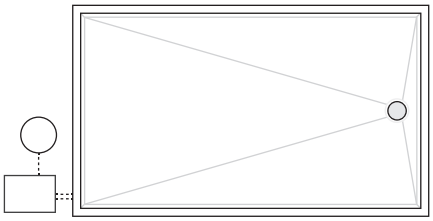

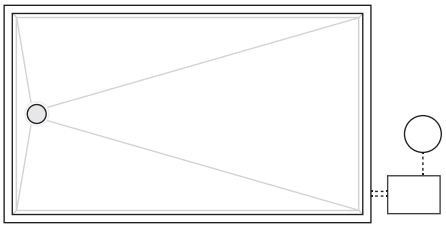

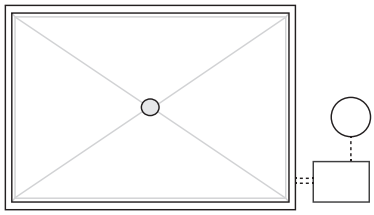

**Radiance® - Operation**

1st Press: System on. LED light on.

2nd Press: System off. LED light off.

System heats to optimal temperature within 20-60 minutes based on ambient temperature. The cooler the room temperature or tub shell, the longer it may take to feel the effects of the shell warming feature.

System will turn off in the event of a power surge or power failure.

7½' cable provided with keypad



Rev: 11 20 2024

# Teak Shower Tray

Teak shower trays by MTI are designed to fit each individual multi-threshold shower tray. Teak finish may be kept natural, stained or periodically treated with oil.

Teak wood is inherently protected by its own natural oils and dense grain. Left in its natural state, the shower tray will assume a silver-gray patina over time.

The teak shower tray can be stained to prolong its initial golden color, or darkened if desired. Any water-based stain may be used; there are multiple color options available.

Teak oil may be applied to condition and darken the wood and can be found at most local hardware stores.

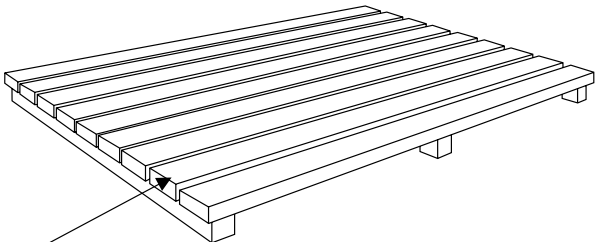


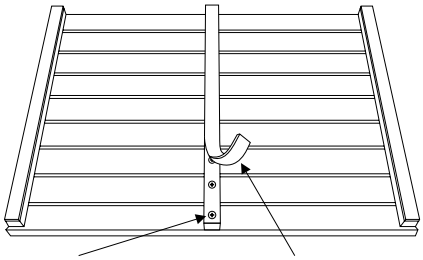


# Care and Cleaning Instructions – Teak Shower Tray

The teak tray should be cleaned every 30–90 days, depending on usage. MTI recommends the mildest cleaner possible for the job. A small amount of dish soap or liquid laundry detergent (such as Wisk) applied with a stiff brush will clean most teak products. Leave detergent on the wood for several minutes, allowing time to suspend the dirt. Scrub lightly with the grain and rinse thoroughly. Use soft cloth to wipe down rubber strips on the underside of the tray — do not scrub. To order replacement strips, please contact MTI's service department.

There is a variety of teak cleaning products on the market, often sold where boating supplies are sold. Teak tray may be sealed with products such as Captain's Varnish. Please follow manufacturers' directions for proper application.

Fine grit sandpaper may be used to remove heavy stains. Always sand with the wood grain.

**NOTE:** If a teak tray is used in conjunction with a frameless shower enclosure, a small notch may need to be made in the teak tray to accomodate the bottom glass clip of the enclosure.

**∗ Environmentally Responsible**

MTI uses only 100% US-certified legal, sustainable teak lumber. The teak lumber used in MTI products is imported by reputable suppliers who meet and exceed all federal regulations.

Our suppliers are dedicated to complying with all international laws regarding labor and conservation concerns in harvesting of the trees.

All premium teak lumber used by MTI is harvested from responsibly managed forests and is not endangering or depleting the rain forests of the world.

# Care and Cleaning Instructions — Acrylic CXL®

### About the Acrylic Shell

Cast acrylic is a stain-resistant, non-porous material. With normal use, the acrylic will retain its inherently glossy appearance with only a minimal amount of care.

### When Cleaning

- Remove dust and dry dirt with a soft, damp cloth.
- Apply common household, non-abrasive cleaner in accordance with manufacturer's directions and precautions. (i.e., a mild dishwashing detergent such as Ivory Liquid). Do not use unless the product label specifically states that it is safe for acrylic.
- Rinse well and dry with a soft, clean cloth. Scouring pads will deteriorate the finish.
- Never use any type of "scrubbing bubbles" or aerosol spray cleaners on your acrylic product.
- Harsh chemicals, such as bleach and ammonia, will deteriorate the finish.
- Never use abrasive cleansers. If any product feels gritty when rubbed between your fingers, do not use on the acrylic surface or system controls as permanent damage will occur.

**WARNING:** Check cleaning and bathing product labels. Do not use unless the product label specifically states that it is safe for acrylic. Some non-abrasive products damage the acrylic over time.

### General Care

- Do not allow your cast acrylic surface to come into contact with nail polish, nail polish remover, Wintergreen oil, dry cleaning solution, lacquer thinners, gasoline, pine oil, etc.
- Avoid using razor blades or other sharp objects that might scratch the surface.
- Small scratches can be removed by applying a thin coat of automotive polishing liquid and buffing lightly with a clean cloth. For deeper scratches, sand the surface lightly with a 400 grit "wet or dry" paper and buff with a fine grit buffing compound.
- Damage occurring to the unit during installation is the responsibility of the installer, and after installation, the responsibility of the user.

**MTI strongly recommends contacting a surface repair professional for deep scratches or chips.**

* Be sure to check the product label. Some products, although not containing abrasives, WILL damage the product over time.

# Care and Cleaning Instructions — DoloMatte®

MTI Solutions DoloMatte is among the most renewable, high-quality surfaces available. Its hard, non-porous surface resists stains. With normal use DoloMatte will retain its beauty with only a minimal amount of care. To maintain its elegant look, follow these simple steps:

- MTI recommends cleaning with a soft, damp cloth and any mild dish soap and water. Fingerprints may be removed with denatured alcohol applied to a soft cloth.
- Use common household, non-abrasive cleaners for most cleaning jobs. Use cleaners labeled specifically for use on plastic.* Follow manufacturer's directions and precautions. Rinse well and dry with a soft, clean cloth.
- Never use any type of "scrubbing bubbles" or aerosol spray cleaners on your product.* DO NOT use harsh chemicals such as hydrochloric acid, sodium hydroxide, paint thinner, chloride solvents, or other solvents with strong acid or base. Also avoid any cleaners that include lime removal agents such as CLR or Lime-Away.
- For more stubborn stains, a mild abrasive cleaner such as Soft Scrub, Bon Ami or Barkeeper's Friend may be used. A gray or red Scotch Brite pad may be used.
- DO NOT allow nail polish, nail polish remover, hair dye, Wintergreen oil, dry cleaning solution, lacquer thinners, gasoline, pine oil, etc. to come in contact with the DoloMatte surface.
- Avoid using razor blades or other sharp objects that might scratch the surface.
- Small scratches may be removed by sanding with 600 grit wet/dry paper followed by cleaning with a mildly abrasive cleaner such those noted above.

**MTI strongly recommends contacting a surface repair professional for deep scratches or chips.**

* Be sure to check the product label. Some products, although not containing abrasives, WILL damage the product over time.

# MTI Residential Warranty

This warranty is effective for all MTI Solutions shower trays manufactured after **May 1, 2021**, and is in lieu of all other warranties. MTI Baths, Inc. (MTI) provides a limited warranty for all MTI Solutions shower trays for use in the continental USA to the **original purchaser** for commercial, rental or multi-family application. Warranty coverage begins from date of purchase (regardless of installation date).

### TEN-YEAR SHELL WARRANTY

MTI warrants the MTI Solutions shower tray against defects in material and workmanship for a period of ten years from date of purchase. This warranty covers defective parts only. The tray must be water tested and installed per our installation instructions. MTI reserves the right to inspect on site any malfunction or defect and determine an appropriate course of action. MTI does not warrant leaks associated with improper waste and overflow installation or damages to surrounding material associated with improper drain installation. Never leave a running shower unattended. Blemishes, air holes or casting marks on the underside of the tray are not considered defects and do not affect the performance or quality of the product.

**Radiance®:** MTI warrants optional Radiance for two years, parts only, against manufacturing defects. If a control box or keypad is deemed defective within the two year period, MTI will send replacement parts at no charge. In the unlikely event that the electrical heating grid for the Radiance® fails within the two-year period, MTI Baths' only obligation is to refund the purchase price of the Radiance system to the original product owner. Proof of purchase required.

### RETURN OF WARRANTY CARD

The warranty registration card must be filled out by the purchaser within one hundred twenty days from purchase and submitted to MTI Baths in order for this warranty to take effect. Warranty registration may be mailed or completed online at **mtibaths.com**.

### WARRANTY EXTENT AND LIMITATIONS

This warranty extends only to the original consumer/purchaser of the MTI Baths product when purchased and originally installed within the boundaries of the continental USA. The warranty terminates after transfer of ownership or if the tub is installed or relocated outside the boundaries of the continental USA* by the original consumer/purchaser prior to the expiration of the warranty period.

Installation must be in an indoor, climate-controlled, residential environment. The unit must be installed and operated according to the manufacturer's instructions contained in the Installation and Owner's Manual.

Proper drain and valve installation is the responsibility of the installer. This product warranty does not cover leaks associated with drain and valve installation or incidental or consequential damages/losses from any cause. installation

### WARRANTY EXCLUSIONS

**This warranty excludes the following:**

- Any and all labor charges, removal or installation expense or freight
- Defects, damage or failure caused by common carrier, installer, user or other persons
- Display or floor model and overstock-sale units
- Products classified as accessories such as, but not limited to, valve and drain kits

**This warranty shall be void due to any of the following:**

- Product modification
- Improper installation care or maintenance
- Installation in a steam shower application
- Failure to water or system test prior to final installation
- Use of the product for any purpose or in any manner other than that for which it is intended

**CONTINUED ON NEXT PAGE...**



Rev: 11 20 2024

## DISCLAIMERS

This warranty supersedes any and all other warranties, expressed or implied. The foregoing warranties are exclusive and made only to the buyer. No other warranty, whether expressed, implied or statutory, including any warranty of merchantability or fitness for particular purpose shall exist in connection with any of the warranties on behalf of MTI Baths, Inc. in addition to or different from those herein given, or to assume for MTI any other liability in connection with any of its product except in a written statement which is signed by an officer of MTI expressly and intentionally giving such warranties or expressing such liabilities.

MTI Baths is not responsible for incidental or consequential damages/losses from any cause such as water damage to carpeting, floors or ceilings. Optional equipment not manufactured by MTI or installed by MTI is not covered. Damages or defects that should be detected before installation are not covered.

The limited warranty does not include labor, transportation, or other costs incurred in the removal and/or reinstallation of the original unit or replacement unit. Costs related to obtaining access for repair are not covered.

The foregoing warranty is EXCLUSIVE and in lieu of all other warranties, including any other warranty of quality, express or implied, and including any warranty of merchantability, or any warranty of fitness for any particular purpose.

## TEAK PRODUCTS WARRANTY

### Teak Shower Trays and Hidden Drain Covers; Sink Trays

Teak Shower Trays, Hidden Drain Covers and Sink Trays from MTI Baths are warranted against defects in material and workmanship for a period of two years from date of purchase. They are handcrafted of the finest teak and manufactured to MTI's specifications. During the warranty period, if your teak shower tray becomes unusable due to any defect in workmanship, please contact MTI. Proof of purchase required.

**Teak Seats** from MTI Baths are warranted for parts only against defects in material and workmanship for a period of one year from date of purchase. They are handcrafted of the finest teak and manufactured to MTI's specifications. During the warranty period, if your teak shower seat becomes unusable due to any defect in workmanship, please contact the MTI service department. Proof of purchase required.

**Return of Warranty Card:** The warranty registration card must be filled out by the purchaser within one hundred twenty days from purchase and submitted to MTI Baths in order for this warranty to take effect. Warranty registration may be mailed or completed online at **mtibaths.com**.

MTI Baths is NOT liable for incidental or consequential damage, loss of time, inconvenience, incidental expenses, labor or material charges or any other costs related to the application of this warranty.

MTI reserves the right to inspect any malfunction or defect on site and determine appropriate course of action.

Replacement parts are subject to availability, and may differ from those originally supplied. MTI can not guarantee that parts currently in use will be available in the future. Changes in materials, parts or specifications are not valid reasons for product refusal or replacement under warranty claims.

## CUSTOMER SERVICE

To verify coverage or request service, please contact the MTI Service Department at **800-783-8827** or email at **service@mtibaths.com**. Please have serial or registration number available.

# MTI Commercial Warranty

This warranty is effective for all MTI Solutions shower trays manufactured after **May 1, 2021**, and is in lieu of all other warranties. MTI Baths, Inc. (MTI) provides a limited warranty for all MTI Solutions shower trays for use in the continental USA to the **original purchaser** for commercial, rental or multi-family application. Warranty coverage begins from date of purchase (regardless of installation date).

### TWO-YEAR SHELL WARRANTY

MTI warrants the MTI Solutions shower tray against defects in material and workmanship for a period of two years from date of purchase. This warranty covers defective parts only. The tray must be water tested and installed per our installation instructions. MTI reserves the right to inspect on site any malfunction or defect and determine an appropriate course of action. MTI does not warrant leaks associated with improper waste and overflow installation or damages to surrounding material associated with improper drain installation. Never leave a running shower unattended. Blemishes, air holes or casting marks on the underside of the tray are not considered defects and do not affect the performance or quality of the product.

**Radiance®:** MTI warrants optional Radiance for one year, parts only, against manufacturing defects. If a control box or keypad is deemed defective within the one-year period, MTI will send replacement parts at no charge. In the unlikely event that the electrical heating grid for the Radiance® fails within the one-year period, MTI Baths' only obligation is to refund the purchase price of the Radiance system to the original product owner. Proof of purchase required.

### RETURN OF WARRANTY CARD

The warranty registration card must be filled out by the purchaser within one hundred twenty days from purchase and submitted to MTI Baths in order for this warranty to take effect. Warranty registration may be mailed or completed online at **mtibaths.com**.

### WARRANTY EXTENT AND LIMITATIONS

This warranty extends only to the original consumer/purchaser of the MTI Baths product when purchased and originally installed within the boundaries of the continental USA. The warranty terminates after transfer of ownership or if the tub is installed or relocated outside the boundaries of the continental USA* by the original consumer/purchaser prior to the expiration of the warranty period.

Installation must be in an indoor, climate-controlled, commercial environment. The unit must be installed and operated according to the manufacturer's instructions contained in the Installation and Owner's Manual.

Proper drain and valve installation is the responsibility of the installer. This product warranty does not cover leaks associated with drain and valve installation or incidental or consequential damages/losses from any cause. installation

### WARRANTY EXCLUSIONS

**This warranty excludes the following:**

- Any and all labor charges, removal or installation expense or freight
- Defects, damage or failure caused by common carrier, installer, user or other persons
- Display or floor model and overstock-sale units
- Products classified as accessories such as, but not limited to, valve and drain kits

**This warranty shall be void due to any of the following:**

- Product modification
- Improper installation care or maintenance
- Installation in a steam shower application
- Failure to water or system test prior to final installation
- Use of the product for any purpose or in any manner other than that for which it is intended

**CONTINUED ON NEXT PAGE...**



Rev: 11 20 2024

**DISCLAIMERS**

This warranty supersedes any and all other warranties, expressed or implied. The foregoing warranties are exclusive and made only to the buyer. No other warranty, whether expressed, implied or statutory, including any warranty of merchantability or fitness for particular purpose shall exist in connection with any of the warranties on behalf of MTI Baths, Inc. in addition to or different from those herein given, or to assume for MTI any other liability in connection with any of its product except in a written statement which is signed by an officer of MTI expressly and intentionally giving such warranties or expressing such liabilities.

MTI Baths is not responsible for incidental or consequential damages/losses from any cause such as water damage to carpeting, floors or ceilings. Optional equipment not manufactured by MTI or installed by MTI is not covered. Damages or defects that should be detected before installation are not covered.

The limited warranty does not include labor, transportation, or other costs incurred in the removal and/or reinstallation of the original unit or replacement unit. Costs related to obtaining access for repair are not covered.

The foregoing warranty is EXCLUSIVE and in lieu of all other warranties, including any other warranty of quality, express or implied, and including any warranty of merchantability, or any warranty of fitness for any particular purpose.

**CUSTOMER SERVICE**

To verify coverage or request service, please contact the MTI Service Department at **800-783-8827** or email at **service@mtibaths.com**. Please have serial or registration number available.

Made in the USA

MTI Baths
670 North Price Road
Sugar Hill, GA 30518
p: (800) 783-8827
f: (800) 438-8827

© Copyright 2024 by MTI Baths, Inc.
Modification Rights Reserved. 1124

mtibaths.com