Features an integrated overflow.

Emi

MODEL 282
48.75" x 31" x 37"
FREESTANDING XX gal to overflow
SculptureStone®
295 lbs / 134 kg soaker
Not recommended as a tub / shower combination. Filling this tub to the maximum may require an above average size or dedicated water heater.

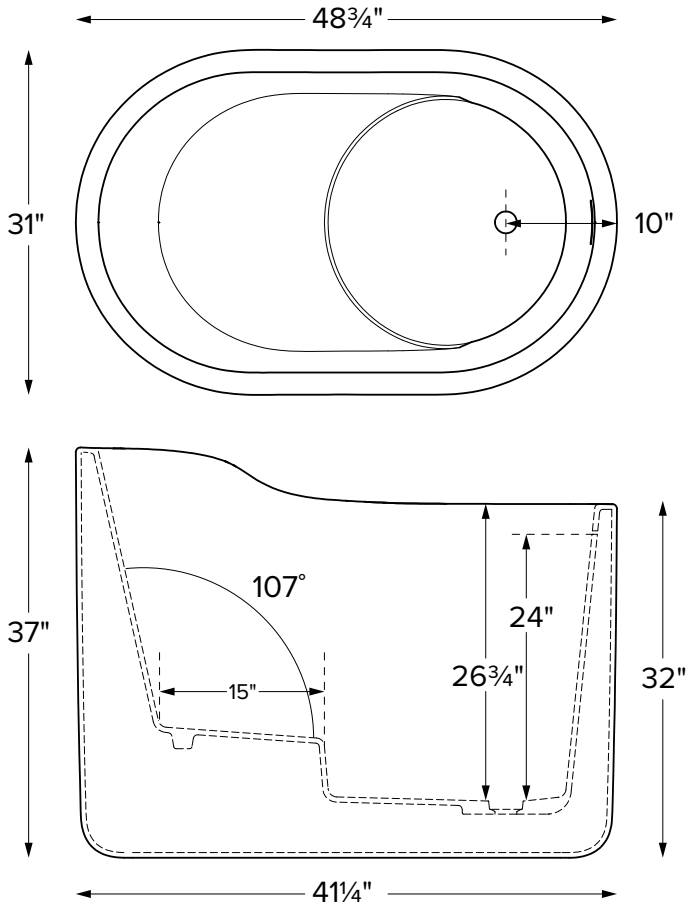

ELECTRICAL COMPONENTS & SPECIFICATIONS
Available as Soaker only
CSA Certified C/US; ANSI Z124.1

See the Installation & Operation Manual for more details.
MTI's Customer Service: Monday-Friday 8am-6pm EST
800-783-8827 or service@mtibaths.com

IMPORTANT ORDERING & INSTALLATION INFORMATION

- Before ordering or installing, please consider future access to equipment.
- Includes an integrated overflow.
- 31" width fits through standard doorway for installation.
- Faucet valves cannot be mounted on this tub model.
- Seat elevation starts at ~4.75" from floor.

- Before discarding tub crate, check for accessories that may be packaged inside.
- All product measurements are ±1/2".
- Specifications and configurations are subject to change without notice.
- Measurements herein supersede all others published prior to publication date below.

CSA # MTCT-282

©2025 by MTI Baths, Inc. Modification Rights Reserved

Rev. 09 09 2026

For more information on options and accessories
go to SculptureStone® Tubs Options on mtibaths.com

Emi

MODEL #: 282
48.75" x 31" x 37"

Hydrotherapy	Package Contents	Part #	Finish	MSRP
Soaker	Soaking bath - no jets. Includes an integrated slotted overflow with a toe-tap drain kit.	**S282**	soft matte	**$11,055**
		S282GL	hand-polished gloss	**$11,530**

Options *Must be ordered at time of purchase*

Quick Ship (QSPRI2) **$1,195** reduces lead time
Please call for availability

Color White

SculptureStone® Tub Accessories

Packaging / Handling Fee Applies

SculptureStone® Bathroom Table (TABLE) **$965** matte finish
(TABLEGL) **$1,465** gloss finish
Order with tub for best color match

Accessories

Teak Bath Mat (TKMAT3018) **$990** Measures 30" x 17.5" x 1"
Custom sizes also available. Contact MTI for details.

Waterproof Bathtub Step
American Walnut (WBSAW) **$1,117**
Iroko (WBSI) **$1,117**
Teak (WBST) **$1,862**

Tidal Waterproof Bathtub Tray
American Walnut (WBTAW) **$1,224**
Iroko (WBTI) **$1,197**
Teak (WBTT) **$1,503**

Drains & Overflow Kits *Must be ordered at time of purchase*

OS&B Euroclicker 3
+**$240** Chrome drain (030)
+**$280** upcharge Matte White drain (045)
+**$280** upcharge Matte Black (073)
+**$280** upcharge Aged Gold (043)

CSA # MTCT- 282
©2025 by MTI Baths, Inc. Modification Rights Reserved

Rev. 09 09 2026