Deborah 1

MODEL 113
48" x 48" x 19.5"
DROP-IN or UNDERMOUNT 69 gal to overflow
Acrylic CXL®
90 lbs / 41 kg soaker 115 lbs / 52 kg plumbed
Filling this tub to the maximum may require an above average size or dedicated water heater.

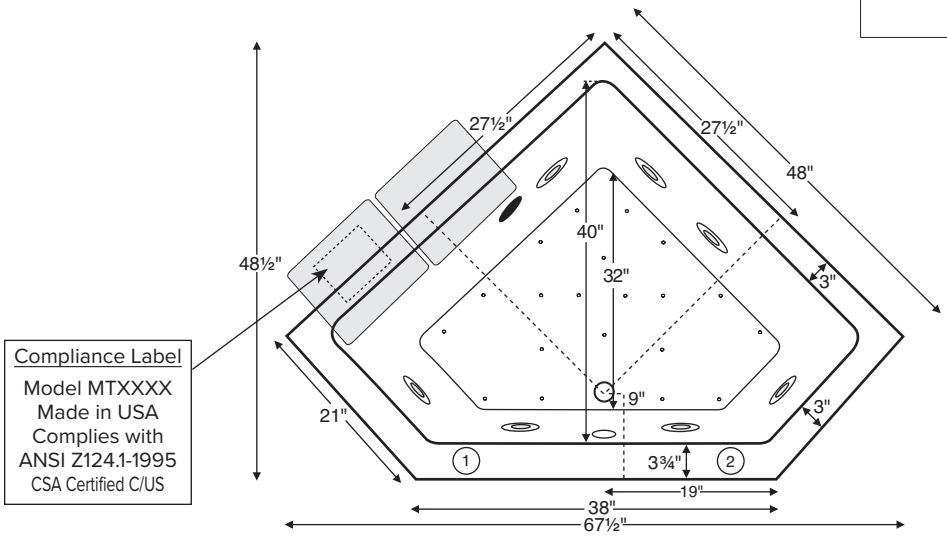

PLEASE NOTE:
This tub is very small and is intended for applications where space is extremely limited.

Numbered areas on tub deck represent possible locations to install cleaning systems, faucets and other fixtures.
Pump extends 6" beyond edge of tub.
Shown with Air Massage and Ultra Whirlpool Package.

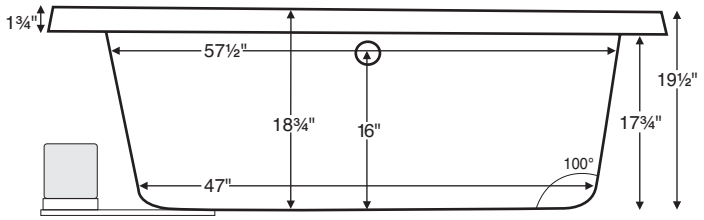

IMPORTANT:
Air baths and tubs with a pre-leveled foam base or frame system add 2-3" to overall tub height.

IMPORTANT ORDERING & INSTALLATION INFORMATION

- Before ordering or installing, please consider future access to equipment.
- Add proper bedding compound to fully level and support bottom of tub.
- When equipped with an air bath package, pre-leveled foam base or frame system, overall tub height is increased by approx. 2-3" and is designed to install on a flat, level subfloor.
- Radiance placed on airbath floor will affect placement of air jets.
- System components may extend beyond the perimeter of deck.
- Measure tub **on-site** before building tub decking.
- Advise MTI when planning to use a glass enclosure. Relocation of controls may be necessary.
- Suction and control locations may vary.
- All tubs are compliant with ASTM C 1028-07 coefficient of friction. DoloMatte meets ANSI A137.1/A326.3 coefficient of friction and AS HB198:2014 slip tests.

ELECTRICAL COMPONENTS & SPECIFICATIONS

Hydrotherapy Package	Components Included	GFCI / 110V
Standard Whirlpool	2-bhp pump	1-15 amp
Stream Bath	½-bhp	1-15 amp
Microbubbles	Microbubbles pump	1-15 amp
Ultra Whirlpool	2-bhp pump, inline heater, ozone	2-15 amp
Air Massage	heated blower	1-15 amp
Air Massage Elite	heated blower, chromatherapy	1-15 amp
Air Massage w/ Stream Bath	½-bhp pump, heated blower	1-15 amp
Air Massage Elite w/ Stream Bath	½-bhp pump, heated blower, chromatherapy	1-15 amp

Electrical requirements may change with the addition of optional therapy components.
See specific option details or installation information.
CSA Certified C/US; B45.5/IAPMO ANSI Z124.1 and ANSI 112.19.7

CSA # MTDS-113

Hydrotherapy Package	Components Included	GFCI / 110V
Microbubbles with Air	Microbubbles pump, heated blower	1-20 amp
Microbubbles with Air Elite	Microbubbles pump, heated blower, chromatherapy	2-15 amp
Air with Whirlpool	2-bhp pump, heated blower	2-15 amp
Air with Ultra Whirlpool	2-bhp pump, inline heater, heated blower, ozone	2-20 amp
Air Elite with Whirlpool	2-bhp pump, heated blower, chromatherapy	2-15 amp
Air Elite with Ultra Whirlpool	2-bhp pump, inline heater, heated blower, chromatherapy, ozone	2-20 amp

See the Installation & Operation Manual for more details.
MTI's Customer Service Monday-Friday 8am-6pm EST
800-783-8827 or service@mtibaths.com

- Before discarding tub crate, check for accessories that may be packaged inside.
- All product measurements are ±1/2".
- Specifications and configurations are subject to change without notice.
- Measurements herein supersede all others published prior to publication date below.

©2023 by MTI Baths, Inc. Modification Rights Reserved

Deborah 1

MODEL # 113
48" x 48" x 19.5"

- Aromatherapy is eliminated for undermount applications
- Air Baths, Pre-Leveled Foam Base or Frame Systems increase overall height by 2-3".

- Aromatherapy is eliminated for undermount applications
- Air Baths, Pre-Leveled Foam Base or Frame Systems increase overall height by 2-3".

Hydrotherapy Packages	Package Contents	Part #	MSRP
Soaker	Soaking bath - no jets	S113-DI S113-UM	$2,560
Microbubbles	1 microbubbles infusion port and pump	M113-DI M113-UM	$5,640
Air Massage	20 air jets, heated air blower, Aromatherapy, pre-leveled foam base	AST113-DI AST113-UM	$5,945
Air Massage Elite	30 air jets, heated air blower, Aromatherapy, Chromatherapy LED lighting, Spa Mode, pre-leveled foam base	AE113-DI AE113-UM	$7,705
Microbubbles with Air Massage	1 microbubbles infusion port and pump, 20 air jets, heated air blower, Aromatherapy, pre-leveled foam base	ASTM113-DI ASTM113-UM	$8,465
Microbubbles with Air Massage Elite	1 microbubbles infusion port and pump, 30 air jets, heated air blower, Aromatherapy, Chromatherapy LED lighting, Spa Mode, pre-leveled foam base	AEM113-DI AEM113-UM	$10,135
Standard Whirlpool	6 point-massage jets, 2-bhp pump	P113-DI P113-UM	$4,755
Ultra Whirlpool	7 point-massage jets, 2-bhp pump, inline heater, Ozone	P113U-DI P113U-UM	$6,605
Air Massage with Standard Whirlpool	6 point-massage jets, 2-bhp pump, 20 air jets, heated air blower, Aromatherapy, pre-leveled foam base	AW113-DI AW113-UM	$8,135
Air Massage with Ultra Whirlpool	7 point-massage jets, 2-bhp pump, inline heater, 20 air jets, heated air blower, Aromatherapy, Ozone, pre-leveled foam base	AU113-DI AU113-UM	$9,985
Air Massage Elite with Standard Whirlpool	6 point-massage jets, 2-bhp pump, 30 air jets, heated air blower, Aromatherapy, Chromatherapy LED lighting, Spa Mode, pre-leveled foam base	AEAP113-DI AEAP113-UM	$9,900
Air Massage Elite with Ultra Whirlpool	7 point-massage jets, 2-bhp pump, inline heater, 30 air jets, heated air blower, Aromatherapy, Ozone, Chromatherapy LED lighting, Spa Mode, pre-leveled foam base	AEAP113U-DI AEAP113U-UM	$10,915

RECOMMENDED SENSORY THERAPIES

Chromatherapy

(LE) **$840** underwater lighting
2 LED lights included

Audiotherapy

(STEREOBT) **$1,280** 2 transducers with bluetooth and amplifier

(BTREMOTE) **$690** bluetooth remote

(STEREOH202) **$1,535** 4 transducers
amplifier not included

Thermaltherapy

(RAD100) **$1,695 Radiance®**
2 heated zones included
(HTISOAK) **$825**

CSA # MTDS-113

©2023 by MTI Baths, Inc. Modification Rights Reserved

For more information on options and accessories go to Acrylic Tub Options on mtibaths.com

Deborah 1

MODEL # 113

Options

Must be ordered at time of purchase.

Standard Colors White (CWH)
Biscuit (CBS)

Quick Ship reduces lead time (QSPRI) **$430**
Please call for availability

Inline Heater maintains water temperature
For Soaker or Air Baths (HTISOAK) **$825**
Includes a recirculating pump
Cannot be combined with Microbubbles.

Virtual Spout high-flow integrated tub filler (FPMJ) **$450**
Must specify stub-out location on order. See page 1 for location options.

Grab Bars from **$330**
Selections vary. Personalization available.

Textured, Slip-Resistant Bottom (TXTBTM) **$105**
Compliant with ASTM C 1028-07 friction coefficient.

Accessories

Pillows from **$180**

Teak Bath Mat (TKMAT3018) **$815**
Custom sizes also available. Contact MTI for details and pricing.

Hydrotherapy Equipment & Cleaning Systems

Must be ordered at time of purchase.

Inline Heater maintains water temperature
For Whirlpools or Stream Bath (HTI) **$570**
Uses existing pump
Cannot be combined with Microbubbles.

Whirlpool Cleaning System
Fill-Flush (FFSO) **$590**
Must specify stub-out location on order. See page 1 for location options.

Whirlpool Jets Pump upgrade may be advisable for optimal performance when adding jets.
Point-Massage Jet
Extra Point-Massage Jet (EJ) **$315**
Micro-Jet from **$360**
Jet styles and packages vary. Personalization available.
Pump Upgrade - 3-bhp (PUMP3) **$315**

Jet Trim Kits
For Standard Whirlpool
Chrome (TRC) **$270**, Brushed Nickel (TRBN) **$725**
For Ultra Whirlpool
Chrome (TRCU) **$370**, Brushed Nickel (TRBNU) **$960**

Ozonator (OZONE) **$515**
Cannot be added to soakers or airbaths without combination hydrotherapy package or HTISOAK.

Installation Options

Must be ordered at time of purchase.

Pre-Leveled Foam Base (PLFOAM) **$295**
All airbaths include a pre-leveled foam base.
Pre-Leveled Frame and Foam Base (PLF) **$740**

Tile Flange
Factory-Installed on 3 sides - rigid ABS (TFKC) **$200**
Field Install Kit - includes rigid ABS & adhesive (TFKNI) **$185**

IMPORTANT: *Must specify flange location(s) on order of Factory-Installed Flange. Not available with optional Low-Profile Rim.*

Drains & Overflow Kits

Toe Tap Rectangular Overflow must be ordered at time of purchase

Cable Driven
Drain Finishes – PVC Drain Kit
White/Biscuit (WOCDW) **$440**
Chrome (WOCD) **$410**
Brushed Nickel (WOCDBN) **$490**
Polished Nickel (WOCDPN) **$540**
Oil-Rubbed Bronze† (WOCDOR) **$550**
Polished Brass (WOCDBR) **$690**
Special Finishes* (WOCDSF) **$1,135**
MTI does not offer a brass body cable drain kit.

Toe Tap
Round Overflow – PVC Drain Kit
Chrome (WOTTC) **$380**
Brushed Nickel (WOTTBN) **$385**
Polished Nickel (WOTTPN) **$385**
Special Finishes* (WOTTSF) **$1,145**
Round Overflow – Solid Brass Drain
Chrome (WOTTSBC) **$810**
Brushed Nickel (WOTTSBBN) **$810**
Polished Nickel (WOTTSBPN) **$810**

Toe Tap
Rectangular Overflow – PVC Drain Kit
Chrome (WOTRC) **$470**
Brushed Nickel (WOTRBN) **$430**
White (WOTRW) **$525**

Lift & Turn
Drain Finishes – PVC Drain Kit
Chrome (WOC) **$185**
White (WOW) **$245**
Brushed Nickel (WOBN) **$305**

Slim-Line Overflow with Toe Tap Drain *Must be ordered at time of purchase.*

- Low profile overflow is factory installed
- Overflow measures 4.5” x 1”
- Provides a deeper soak
- Not available for commercial applications

Slim-Line Overflow with Toe Tap Drain
PVC Drain
Chrome (SLOTC) **$500**
Brushed Nickel (SLOTBN) **$530**
Polished Nickel (SLOTPN) **$555**
White (SLOTW) **$430**

Slim-Line Overflow with Toe Tap Drain
Solid Brass Drain
Chrome (SLOTSBC) **$930**
Brushed Nickel (SLOTSBBN) **$935**
Polished Nickel (SLOTSBPN) **$935**
White (SLOTSBW) **$965**

† *MTI has selected an oil-rubbed bronze finish that is compatible with Delta and many other manufacturers. To ensure best match, order as a Special Finish and submit a sample.*

* *Allow 2-4 weeks lead time for Special Finishes. Send sample for best match.*

©2024 by MTI Baths, Inc. Modification Rights Reserved