acquabella®

Delgada

Drain Cover

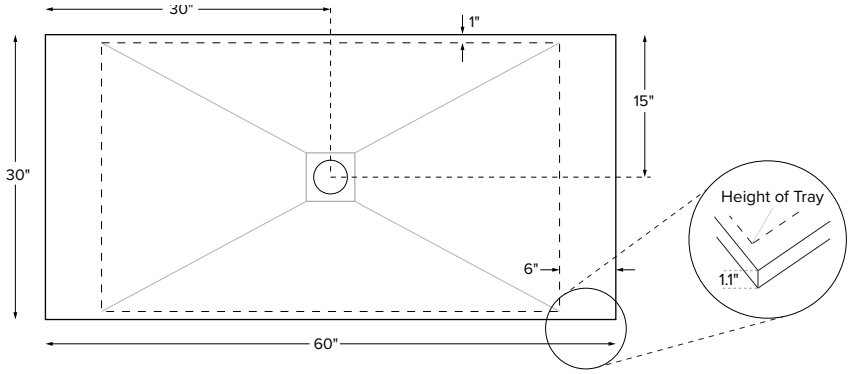

60" x 30" x 1.1"
MULTI, LOW-PROFILE THRESHOLD textured floor
Center Drain
Mineral Composite
128 lbs / 58 kg

Factory Cut-to-Measure Available

This shower base is available with Factory Cut-to-Measure service. For an additional charge, this model may be factory cut to fit your installation requirements as follows:

Refer to the diagram (right) for allowable cut zones.

To order this option, a completed MTI Cut-to-Measure Request Form must accompany the purchase order. All custom cut dimensions must be specified at the time of order.

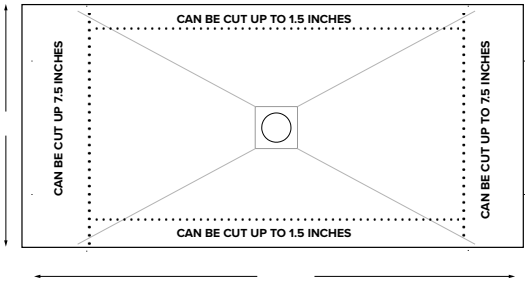

Model #	Texture	Description	Color / Finish	MSRP
SBB6030C	Pizarra	Color and texture matched recessed drain cover	White Matte	**$1,815**
SBB6030Cxxx*			Optional Color	

Options Must be ordered at time of purchase

Finish/Color (no charge) Sand (SND) Matte Gray (MGY)	Charcoal (MCH) Matte Black (MBK)

* Replace "XXX" with color code in Options section

ORDERING AND INSTALLATION

- 3.5" drain opening pre-drilled.
- Drain cover included. Check packaging carefully.
- Tile flange included.
- Designed to install on a flat, level subfloor. See installation instructions.
- All bases are in accordance with CSA B45.5/IAPMO Z124 standard and compliant with ASTM C 1028-07 coefficient of friction.

Accessories

Teak Shower Seat

Premium

Natural Stainless (TK-SSEAT2416BNS) **$3,280**

High-Polished Stainless (TK-SSEAT2416BHP) **$3,750**

Standard

Natural Stainless (TK-SSEAT2215NS) $**1,220**

High-Polished Stainless (TK-SSEAT2215HP) **$1,700**

Teak Bath Mat (TKMAT3018) **$880** Measures 30" x 17.5" x 1" Custom sizes also available. Contact MTI for details.

Recommended Drain Kits

Oatey 42099

Westbrass D206P

See the Installation & Operation Manual for more details.
MTI's Customer Service: Monday-Friday 8am-6pm EST
800-783-8827 or service@mtibaths.com

CSA # MCSB-B6030

©2025 by MTI Baths, Inc. Modification Rights Reserved

- Options and accessories may be packaged inside the box. Always check packaging before discarding.
- All product measurements are ±1/2".• Specifications and configurations are subject to change without notice.
- Measurements herein supersede all others published prior to publication date below.

mti BATHS

Rev. 07 08 2026